VorTek Series U42 and U43
Ultrasonic Flow Meters

Instruction Manual

Document Number M-000-00034

Rev 10/2019

8475 W I-25 Frontage Rd
Suite 300
Longmont, CO 80504
(303) 682-9999 (888) 386-7835 Fax (303) 682-4368

http://www.vortekinst.com

Notice

Thank you for choosing our Ultrasonic Flow Meter.

Please read the instruction manual carefully before you use the flow meter to avoid damaging the flow meter or improper use.

Warning

May cause injury.

Attention

May damage the flow meter.

Some of the instructions may be different for the flow meter you purchased, depending on the configuration requirements. Otherwise, there is no indication about the product design and upgrade requirements in the instructions. Please refer to the version number as well as the Appendices.

Product Components

Be sure to inspect all product components before installing the flow meter. Check to see if the spare parts are in accordance with the packing list. Make sure that there is no damage to the enclosure due to a loose screw or wire or other damage that may have occurred during transportation. If you have any questions, please contact your representative immediately.

<table>
<tr><th>Transmitter (Electronic)</th><th>Transducers (Sensors)</th></tr>
<tr><td>U42:

U43:
 </td><td> </td></tr>
<tr><th>Accessories</th><th>Documents</th></tr>
<tr><td>
1. Coupling Compound
2. Pipe Straps
3. Screws and Plastic Bushings</td><td>1. Instruction Manual
2. Packing List
3. Position Drawing
4. Calibration Certificate</td></tr>
</table>

Table of Contents

1. Product Overview 7
1.1 Introduction 7
1.2 Features of the Ultrasonic Flow Meter 7
1.3 Theory of Operation 7
1.4 Applications 8
1.5 U42 Specifications 8
1.6 U43 Specifications 9
2. Transmitter Installation and Connection 10
2.1 Transmitter Installation 10
2.1.1 U42 Transmitter Installation 10
2.1.2 U43 Transmitter Installation 11
2.2 Wire Connection 12
2.2.1 Power Supply Options 12
2.2.2 U42 Transmitter Wiring 12
2.2.3 U43 Transmitter Wiring 14
2.3 Powering On 15
3. Transducer Installation 16
3.1 Measurement Site Selection 16
3.2 Transducer Installation 18
3.2.1 Transducer Spacing 18
3.2.2 Transducer Mounting Methods 18
3.2.3 V Method 18
3.2.4 W Method 19
3.2.5 Z Method 20
3.3 Transducer Mounting Inspection 20
3.3.1 Signal Strength 21
3.3.2 Signal Quality (Q Value) 21
3.3.3 Total Time and Delta Time 21
3.3.4 Transit Time Ratio 21
3.3.5 Warnings 22
4. Display & Menus 23
4.1 Display & Keypad 23

4.1.1 Keypad Functions 23
4.1.2 Keypad Operation 23
4.2 Using the Setup Menus 24
4.2.1 Programming the Flow Meter 25
4.2.2 Output Menu 25
4.2.3 Display Menu 26
4.2.4 Alarms Menu 26
4.2.5 Totalizer #1 Menu 27
4.2.6 Totalizer #2 Menu 27
4.2.7 Energy Menu 28
4.2.8 U42 Fluid Menu 28
4.2.9 U43 Fluid Menu 29
4.2.10 Units Menu 29
4.2.11 Time & Date Menu 30
4.2.12 Diagnostics Menu 30
4.2.13 Calibration Menu 31
4.2.14 Password Menu 32
4.2.15 Engineer Menu 33
4.2.16 Engineer Menu 2 34
5. Operation Instructions 35
5.1 System Normal Identification 35
5.2 Low Velocity Cutoff Value 35
5.3 Zero Settings 35
5.4 Scale Factor 35
5.5 System Lock 36
5.6 Active 4 - 20 mA Current Loop Output 36
5.7 Frequency Output 36
5.8 Totalizer Pulse Output 37
5.9 Alarm Programming 37
5.10 Active 4 - 20 mA Analog Output Calibration 38
5.11 SD Card Operation 38
5.11.1 Specifications 38
5.11.2 Install or Remove the SD Card While the Meter is Powered On 38
5.12 ESN 39
6. Error Diagnosis 40

6.1 Error Codes and Solutions 40
6.2 Frequently Asked Questions 41
7. Appendix 1 – Serial Interface Network Use and Communications Protocol 42
7.1 Overview 42
7.2 Serial Port Definition 42
7.3 Direct Connection via RS-232 to the Host Device 43
7.4 MODBUS Communications Protocol and Use 43
8. Appendix 2 – Flow Application Data 49
8.1 Sound Velocity and Viscosity for Fluids Commonly Used 49
8.2 Sound Velocity for Various Materials Commonly Used 49
8.3 Sound Velocity in Water (1 atm) at Different Temperatures 50

1. Product Overview

1.1 Introduction

This product is a wall-mount, clamp-on type ultrasonic flow meter using transfer time technology. The clamp-on type ultrasonic flow meter is easy to install and has no need to cut off the pipe, which saves you a lot of trouble and cost. At the same time, this flow meter has our unique calculation software to ensure the high accuracy and low velocity response.

This ultrasonic flow meter widely applies in the oil industry, water treatment, pure water, chemical, etc.

The ultrasonic flow meter could add an RTD model and temperature sensor to become an energy meter for the monitoring of energy use.

1.2 Features of the Ultrasonic Flow Meter

When comparing this flow meter with other traditional flow meters or ultrasonic flow meters, it has distinctive features including high precision, high reliability, high capability, and low cost. The flow meter features other advantages:

1. With ARM chip, low power consumption, high reliability, anti-jamming, and outstanding benefits.
2. User-friendly menu design. Parameters of pipe range, pipe material, pipe wall thickness, output signals, etc. can be conveniently entered via the menus. US and Metric measurement units are available.
3. Daily, monthly, and yearly totalized flow: totalized flow for the last 64 days and months as well as for the last 6 years are may be viewed. With the SD Card, 512 files can be stored; the time interval can be within 1 second.
4. Parallel operation of positive, negative, and net flow totalizer with scale factor and 7-digit display. An internally configured batch controller makes batch control convenient.

The flow meter ensures a higher resolution and wider measuring range by the 0.04 ns high resolution, high linearity, and high stability time measuring circuit and 32 bits digits processing program.

1.3 Theory of Operation

When the ultrasonic signal is transmitted through the flowing liquid, there will be a difference between the upstream and downstream transit time (travel time or time of flight), which is proportional to flow velocity, according to the formula below:

$$V = \frac{MD}{\sin 2\theta} \times \frac{\Delta T}{T_{up} \bullet T_{down}}$$

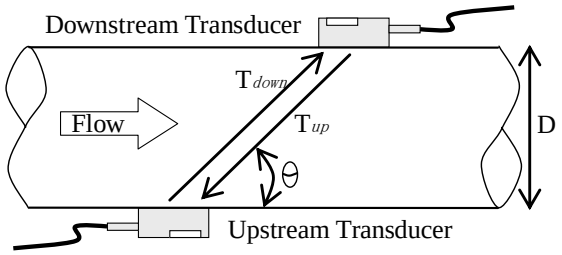

Remarks:

V	Medium Velocity
M	Ultrasonic frequency of reflection
D	Pipe Diameter
θ	The angle between the ultrasonic signal and the flow
T_{up}	Transit time in the forward direction
T_{down}	Transit time in the reverse direction

$\Delta T = T_{up} - T_{down}$

1.4 Applications

- Water, sewage (with low particle content), and seawater;
- Water supply and drainage water;
- Power plants (nuclear power plant, thermal, and hydropower plants), heat energy, boiler feed water, and energy management system;
- Metallurgy and mining applications (cooling water and acid recovery, for example);
- Petroleum and chemicals;
- Food, beverage, and pharmaceutical;
- Marine operation and maintenance;
- Energy economy supervision and water conservation management;
- Pulp and paper;
- Pipeline leak detection;
- Regular inspection, tracking, and collection;
- Energy measuring and balance;
- Network monitoring systems and energy / flow computer management.

1.5 U42 Specifications

Performance Specifications	
Flow Range	± 40 ft/s (± 12 m/s).
Accuracy	± 1% of reading (0.5% according to calibration)
Repeatability	0.15% of reading
Pipe Size	1″ ~ 200″ (25 mm ~ 5000 mm).
Function Specifications	
Output	Analog output: 4 ~ 20 mA, (max load 750 Ω); Pulse output: 0 ~ 9999 Hz, Open Collector Transistor (OCT) (min. and max. frequency is adjustable);
Communication Interface	RS-232 & RS-485 Modbus
SD Card (standard)	Max record: 512 days. Record time interval: 1 ~ 3600 s.
Power Supply	90 - 245 VAC, 48 ~ 63 Hz, or 10 - 36 VDC.
Keypad	16 light tactile keys.
Display	256*128 lattice, backlit LCD.
Transmitter Temperature	Transmitter: -40 °F ~ 140 °F (- 40 ℃ ~ 60 ℃).

Humidity	Up to 99% RH, non-condensing.
Physical Specifications	
Transmitter	Die-cast aluminum, IP65.
Transducer	Encapsulated design. Standard / Maximum cable length: 30 ft / 1000 ft (9m / 305 m).

1.6 U43 Specifications

Performance Specifications	
Flow Range	± 20 ft/s (± 6 m/s).
Accuracy	± 1.5% of reading (1% according to calibration)
Repeatability	0.2% of reading
Pipe Size	1″ ~ 48″ (25 mm ~ 1200 mm).
Fluid	Water
Function Specifications	
Output	Analog output: 4 ~ 20 mA, (max load 750 Ω); Pulse output: 0 ~ 9999 Hz, Open Collector Transistor (OCT) (min. and max. frequency is adjustable);
Communication Interface	RS-232 & RS-485 Modbus
Power Supply	10 - 36 VDC @ 1A
Keypad	16 light tactile keys.
Display	256*128 lattice, backlit LCD.
Transmitter Temperature	Transmitter: -40 °F ~ 140 °F (- 40 ℃ ~ 60 ℃).
Humidity	Up to 99% RH, non-condensing.
Physical Specifications	
Transmitter	PC/ABS, IP65.
Transducer	Encapsulated design. Standard / Maximum cable length: 30 ft / 1000 ft (9m / 305 m).

2. Transmitter Installation and Connection

2.1 Transmitter Installation

Attention

When installing, please ensure the front cover is secure and will not fall open.

2.1.1 U42 Transmitter Installation

There is a "Position Drawing" in the packing.

Please use it as a template where you are installing the flow meter. Using the screw positions shown on the drawing, drill four mounting holes with a 6 mm drill.

Take out the enclosed screws and install the 4 attaching lugs into the holes drilled previously. Insert the plastic bushings into the holes. Then put the flow meter into position and screw it in.

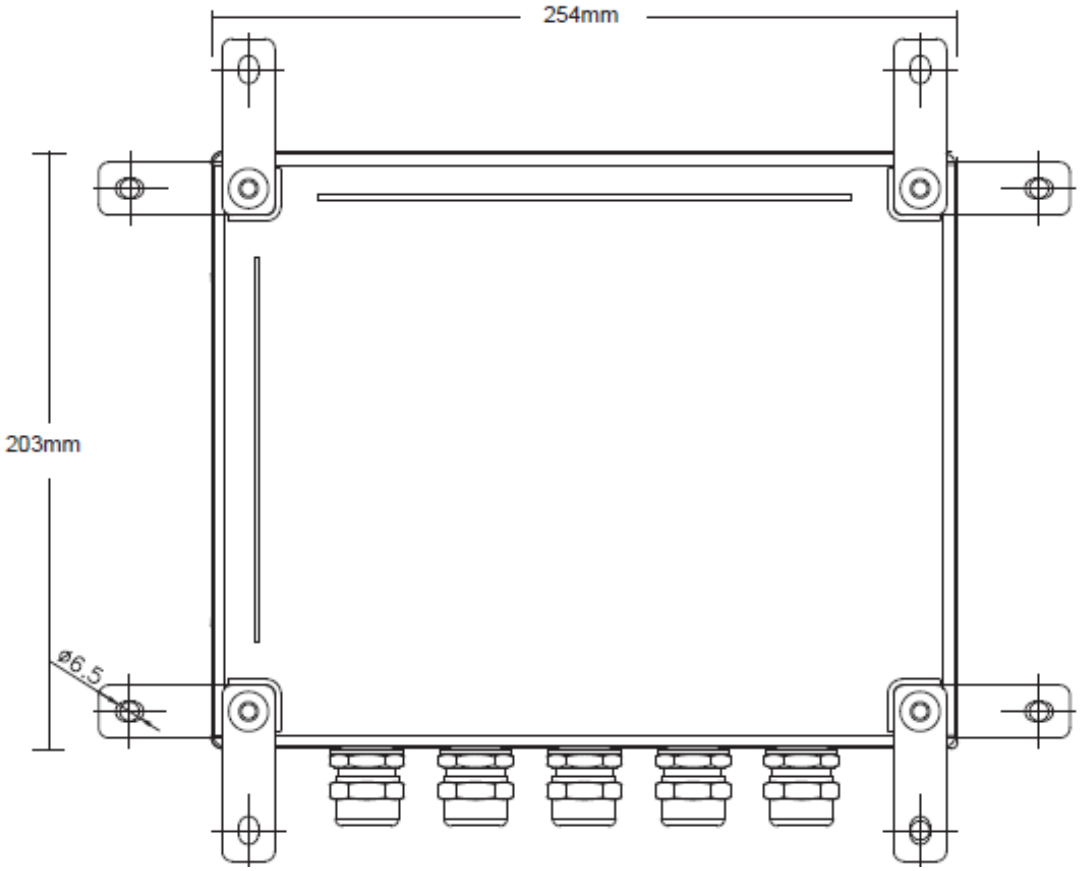

2.1.2 U43 Transmitter Installation

There is a "Position Drawing" in the packing.

Please use it as a template where you are installing the mounting bracket. Using the screw positions shown on the drawing, drill three mounting holes with a 6 mm drill.

Take out the enclosed screws and install the 3 attaching lugs into the holes drilled previously. Insert the plastic bushings into the holes. Then put the mounting bracket into position and screw it in. Slide the flow meter onto the mounting bracket.

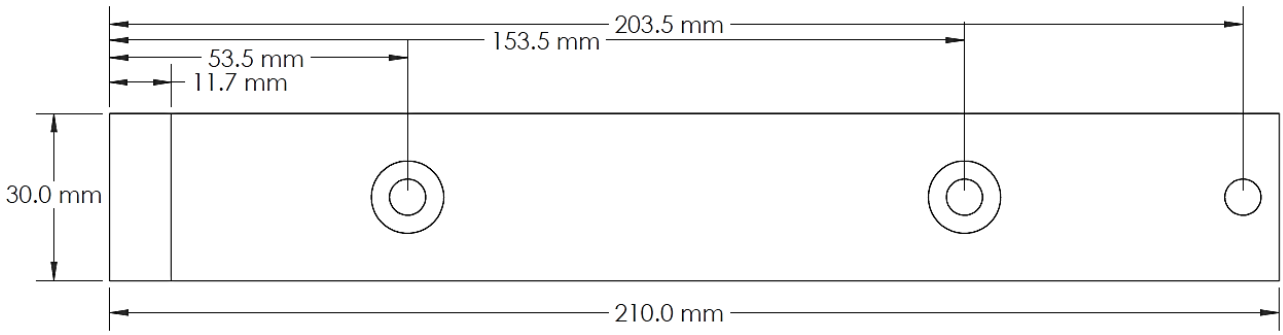

2.2 Wire Connection

2.2.1 Power Supply Options

Customers should pay special attention to specify the desired power supply when wiring.
Factory standard power supply is 90 - 245 VAC for U42 and 10 - 36 VDC/1A max for U43.

To ensure the transmitter can work normally, please pay attention to the following when wiring:

Ensure that power connections are made in accordance with the specifications shown on the transmitter.

U42 transmitters can be powered by two different power supplies: 90 - 245 VAC or 10 - 36 VDC.

2.2.2 U42 Transmitter Wiring

Once the electronics enclosure has been installed, the flow meter wiring can be connected.

Open the case, you will find the power board wiring ports, are as follows;

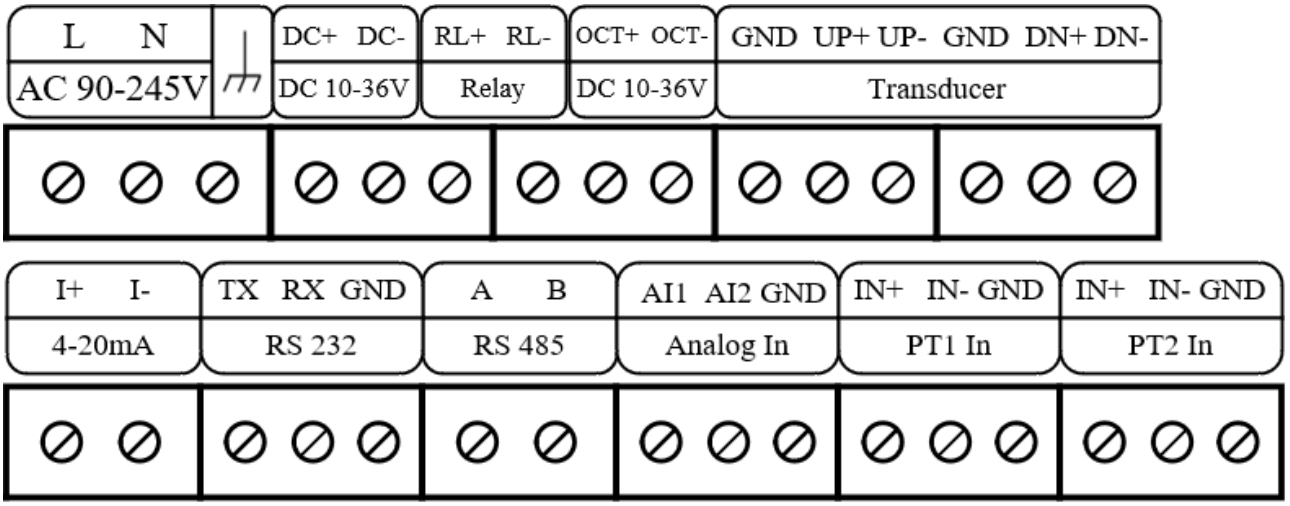

For double-shielded transducer cable: "-" on Blue wire, "+" on Brown wire, and "shield" on Black shield wire.

Refer to the below diagram for specific connection:

Sign	Description
AC+	AC Power 90 - 245 V+
AC-	AC Power 90 - 245 V-
	Grounding
DC+	DC Power DC 10 - 36 V+
DC-	DC Power DC 10 - 36 V-
RL OUT+	Relay Output
RL OUT-	
OCT OUT+	Open Collector Transistor (OCT) Output

OCT OUT-	
GND	Upstream Sensor Grounding Black
UP+	Upstream Sensor + Brown
UP-	Upstream Sensor - Blue
GND	Downstream Sensor Grounding Black
DN+	Downstream Sensor + Brown
DN-	Downstream Sensor - Blue
I OUT+	Active 4 - 20 mA Output
I OUT-	
TX	RS-232 Output
RX	
GND	
A	RS-485 Output
B	
AI1	Analog Signal Input and Grounding (Only Energy Meter)
AI2	
GND	
IN1+	Temperature Sensor Inline +
IN1-	Temperature Sensor Inline -
GND	Temperature Sensor Inline Grounding
IN2+	Temperature Sensor Outline +
IN2-	Temperature Sensor Outline -
GND	Temperature Sensor Outline Grounding

Brown - Up+, DN+
Blue - Up-, DN-
Black - GND

Warning

Only wire when the power is off. Reliable grounding must be used for the instrument before installation and use.

Use either AC or DC power supply. Do not connect them both at the same time.

2.2.3 U43 Transmitter Wiring

Once the electronics enclosure has been installed, the flow meter wiring can be connected.

Open the case, you will find the power board wiring ports, are as follows;

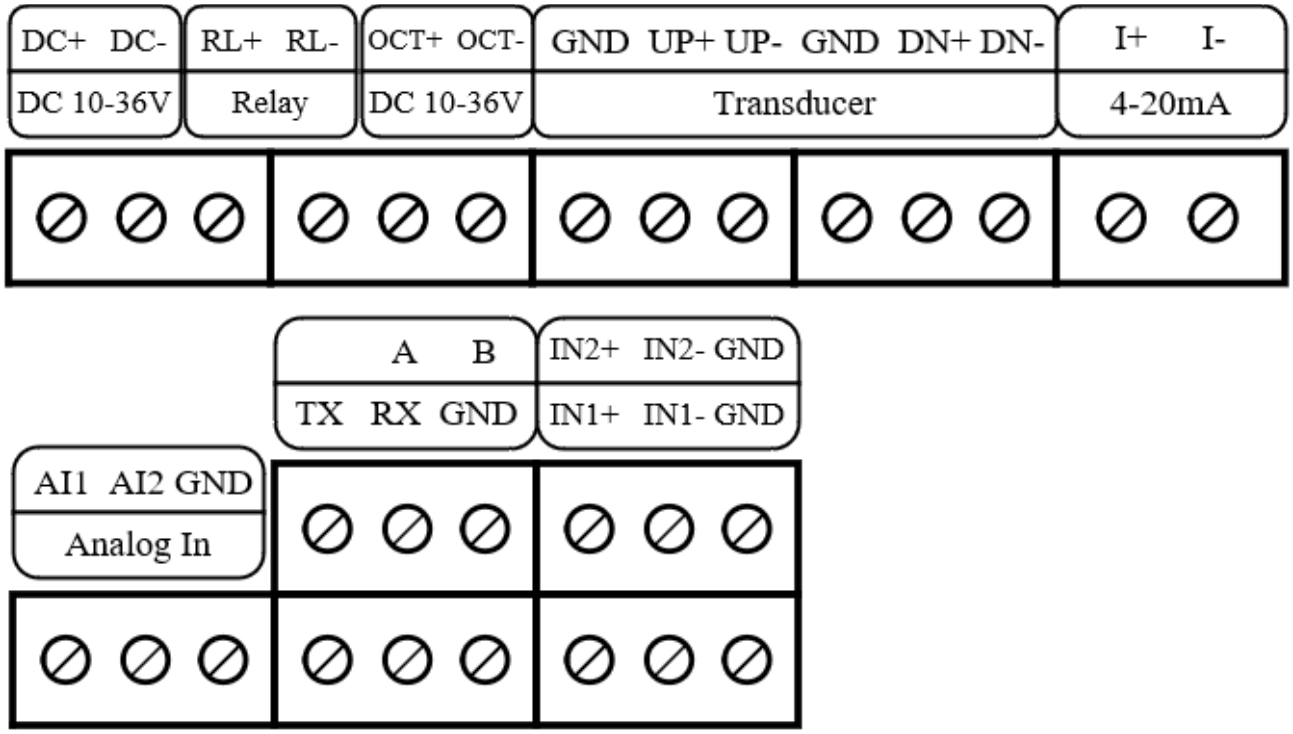

For double-shielded transducer cable: "-" on the Blue wire, "+" on the Brown wire, and "shield" on the Black shield wire.

Refer to the below diagram for specific connection:

Sign	Description
DC+	DC Power DC 10 - 36 V +
DC-	DC Power DC 10 - 36 V -
⏚	Grounding
RL OUT+	Relay Output
RL OUT-	
OCT OUT+	Open Collector Transistor (OCT) Output
OCT OUT-	
GND	Upstream Sensor Grounding Black
UP+	Upstream Sensor + Brown
UP-	Upstream Sensor - Blue
GND	Downstream Sensor Grounding Black

DN+	Downstream Sensor + Brown
DN-	Downstream Sensor - Blue
I OUT+	Active 4 - 20 mA Output
I OUT-	
AI1	Analog Signal Input and Grounding (Only Energy Meter)
AI2	
GND	
TX	RS-232 Output
RX	
GND	
A	RS-485 Output
B	
IN1+	Temperature Sensor Water Inline +
IN1-	Temperature Sensor Water Inline -
GND	Temperature Sensor Water Inline Grounding
IN2+	Temperature Sensor Water Outline +
IN2-	Temperature Sensor Water Outline -
GND	Temperature Sensor Water Outline Grounding

Brown	-	Up+, DN+
Blue	-	Up-, DN-
Black	-	GND

Warning

Only wire when the power is off. Reliable grounding must be used for the instrument before installation and use.

Use only DC power supply. Do not connect AC and DC both at the same time.

2.3 Powering On

As soon as the flow meter is switched on, the system will run automatically according to the last input parameters. After installation, when the system is switched on, gain adjustment can be monitored in the Run Mode Screens. After code "*R" is displayed on the upper right corner of the screen, the system will activate the normal measurement condition automatically. It is indicated by code "*R" on the upper left corner of the screen.

If it is the first use or install on a new site, the customer needs to input the new installation site parameters. Any parameters which are set by the user will be saved permanently until they are changed by the user.

When the user modifies the parameters and removes the transducers, the meter will recalculate automatically, and operate normally with the parameters.

The flow meter can always complete all tasks at the same time. The tasks (including measurement, output, etc.) will be carried out as usual, no matter which screen is displayed.

3. Transducer Installation

3.1 Measurement Site Selection

The installation of this ultrasonic flow meter is the simplest of all kinds of flow meters. Only one suitable measuring site is needed. Plug the transducers into the pipe and start the measurement.

When selecting a measurement site, it is important to select an area where the fluid flow profile is fully developed to guarantee a highly accurate measurement. Use the following guidelines to select a proper installation site:

- Choose a section of pipe that is always full of liquid, such as a vertical pipe with flow in the upward direction or a full horizontal pipe.
- Ensure enough straight pipe length at least equal to the figure shown below for the upstream and downstream transducers installation.
- On the horizontal pipe, the transducer should be mounted on the 9 o'clock and 3 o'clock positions of the pipe, avoiding the positions of 6 o'clock and 12 o'clock, in case of signal attenuation caused by the pipe, sediment at the bottom, or bubble cavitation on the pipe.
- Ensure that the measuring site temperature is under the transducer temperature limits.
- Consider the inside condition of the pipe carefully. If possible, select a section of pipe where the inside is free of excessive corrosion or scaling.
- Choose a section of sound conducting pipe.

90° Bend

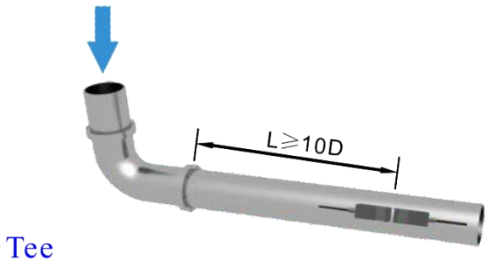

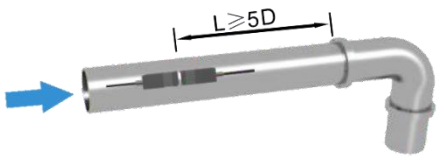

Tee

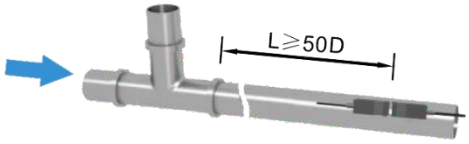

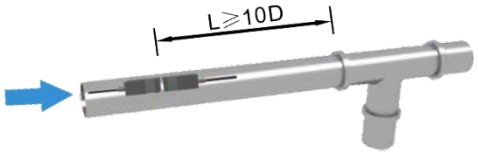

Diffuser

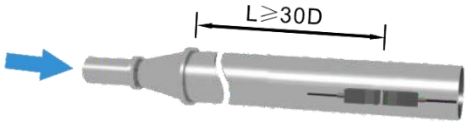

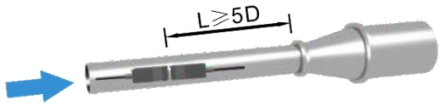

Reduce

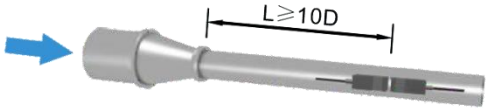

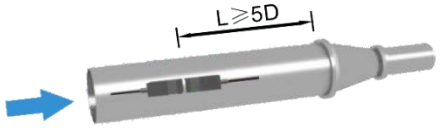

Valve

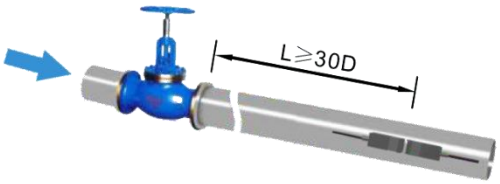

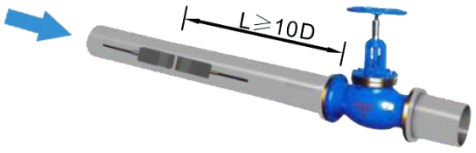

Vertical

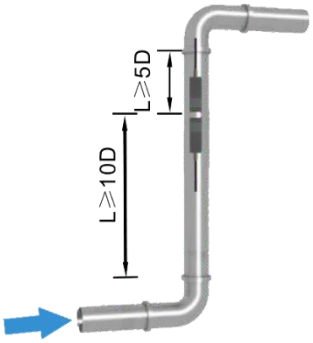

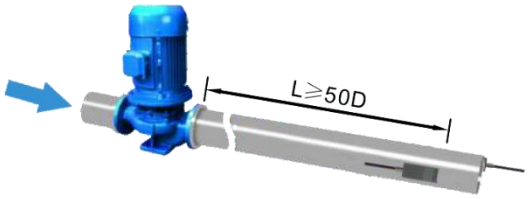

3.2 Transducer Installation

Please make sure the pipe surface where the transducers are to be mounted is clean. Ensure the removal of rust, scale, or loose paint to have a smooth surface. Choose the section and apply the coupling compound down the center of the face of each transducer as well as on the pipe surface. Ensure there are no air bubbles between the transducers and the pipe wall. Attach the transducers to the pipe with the straps provided and tighten them securely.

Note: The two transducers should be mounted at the pipe's centerline on horizontal pipes.

Make sure that the transducer mounting direction is parallel with the flow.

During the installation, there should be no air bubbles or particles between the transducer and the pipe wall. On horizontal pipes, the transducers should be mounted in the 3 o'clock and 9 o'clock positions of the pipe section in order to avoid any air bubbles inside the top portion of the pipe. (Refer to Measurement Site Selection). If the transducers cannot be mounted horizontally symmetrically due to limitation of the local installation conditions, it may be necessary to mount the transducers at a location where there is a guaranteed full pipe condition (the pipe is always full of liquid).

3.2.1 Transducer Spacing

The spacing between the ENDS of the two transducers is considered as the standard transducer spacing. After entering the required parameters, check the data displayed in the Calibration Menu and adjust the transducer spacing according to the data displayed in the Calibration Menu.

3.2.2 Transducer Mounting Methods

There are two mounting method that can be used depending on the measuring environment: V method (reflect method) and Z method (direct method).

V method is easy to install and is fit for most ultrasonic environments, but Z method has a stronger signal and works better in a complicated measuring environment.

3.2.3 V Method

The V method is considered the standard method. It is convenient to use, but still requires proper installation of the transducers, contact on the pipe at the centerline, and equal spacing on either side of the centerline. This is recommended for carbon steel pipes.

Side view	Section
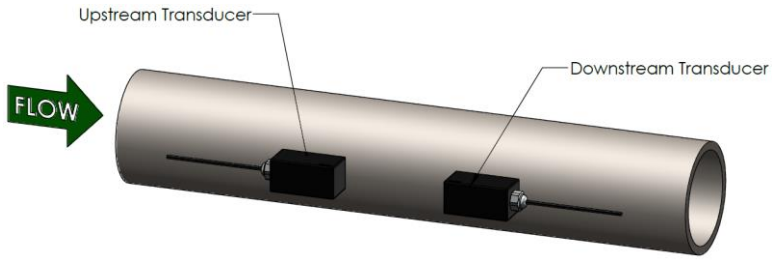	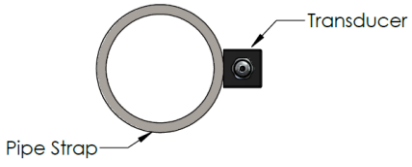

Top View
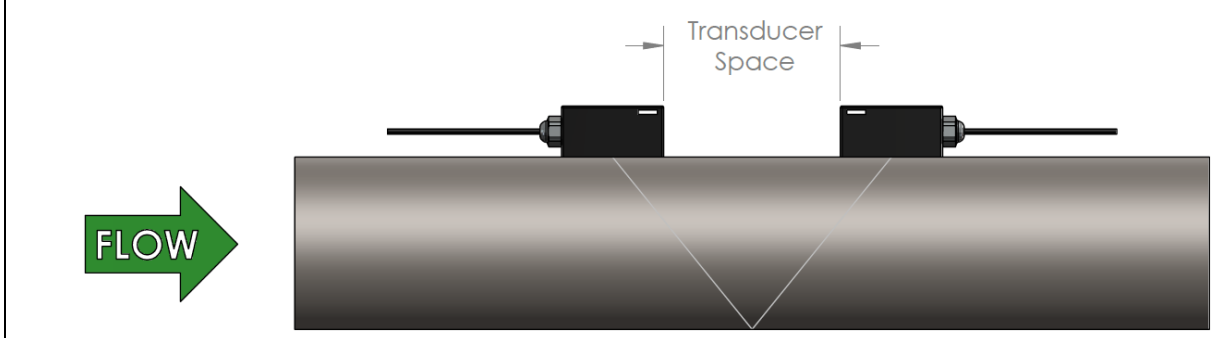

3.2.4 W Method

The signal transmitted in a W method may be stronger than with the V method on smaller diameter pipes. This method is recommended for pipes with diameters of 3 inches (75 mm) and below or PVC pipes.

Side view	Section
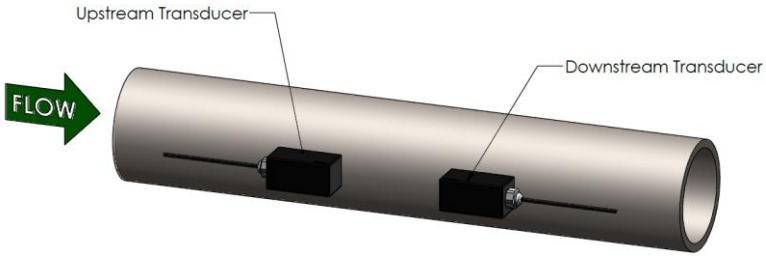	

Top View
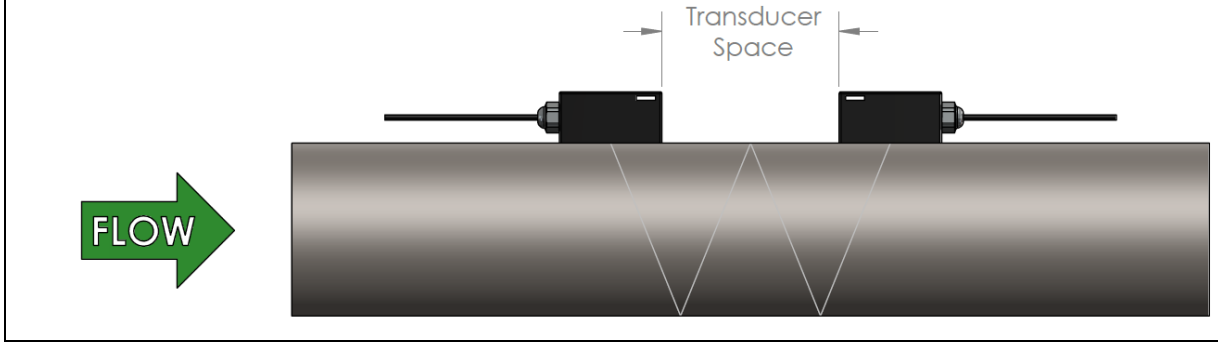

3.2.5 Z Method

The signal transmitted in a Z method installation has less attenuation than a signal transmitted with the V or W methods. When pipes are too large, there is some suspended solid in the fluid or the scaling and liner are too thick. This is why the Z method utilizes a directly transmitted (rather than reflected) signaling which transverses the liquid only once. The Z method is able to measure on pipe diameters ranging from 4 to 200 inches (100 mm to 5000 mm) approximately. Therefore, the Z method is recommended for pipe diameters over 12 inches (300 mm).

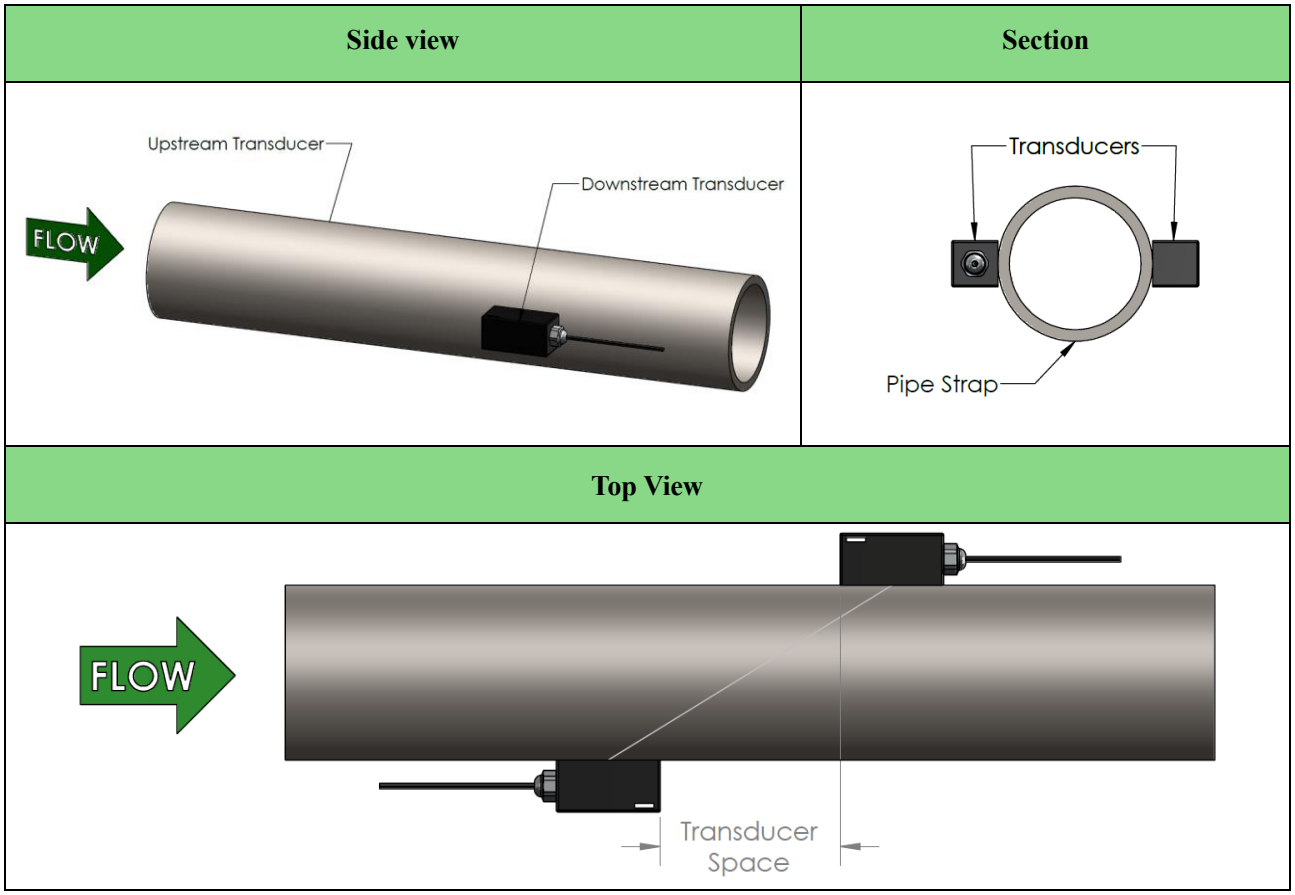

3.3 Transducer Mounting Inspection

Check to see if the transducer is installed properly and if there is an accurate and strong enough ultrasonic signal to ensure proper operation and high reliability of the transducer. It can be confirmed by checking the detected signal strength, total transit time, delta time, and transit time ratio.

The "mounting" condition directly influences the flow value accuracy and system long-time running reliability. In most instances, only applying a wide band of sonic coupling compound lengthwise on the face of the transducer and sticking it to the outside pipe wall should get good measurement results. However, the following inspections still need to be carried out in order to ensure the high reliability of the measurement and long-term operation of the instrument.

3.3.1 Signal Strength

Signal strength (displayed in the Diagnostics Menu) indicates a detected strength of the signal both from upstream and downstream directions. The relevant signal strength is indicated by numbers from 00.0 ~ 99.9. The 00.0 value represents no signal detected while 99.9 represent maximum signal strength. Normally, the stronger the signal strength detected, the longer the operation of the instrument is reliable, as well as the more stable the obtained measurement value.

Adjust the transducer to the best position and check to ensure that enough sonic coupling compound was applied during installation to obtain the maximum signal strength.

The system normally requires a signal strength over 75.0, which is detected from both upstream and downstream directions. If the signal strength detected is too low, the transducer installation position and the transducer mounting spacing should be readjusted and the pipe should be reinspected. If necessary, change the mounting method to the Z method.

3.3.2 Signal Quality (Q Value)

Q value is short for Signal Quality (displayed in the Diagnostics Menu). It indicates the level of the signal detected. Q value is indicated by numbers from 00 ~ 99. The 00 value represents the minimum signal detected while 99 represent the maximum. Normally, the transducer position should be adjusted repeatedly and coupling compound application should be checked frequently until the signal quality detected is as strong as possible.

3.3.3 Total Time and Delta Time

"Total Time" and "Delta Time", which display in the Diagnostics Menu, indicate the condition of the installation. The measurement calculations in the flow meter are based upon these two parameters. Therefore, when "Delta Time" fluctuates widely, the flow and velocities fluctuate accordingly. This means that the signal quality detected is too poor. It may be the result of poor pipe installation conditions, inadequate transducer installation, or incorrect parameter input.

Generally, "Delta Time" fluctuation should be less than ±20%. Only when the pipe diameter is too small, or velocity is too low can the fluctuation be wider.

3.3.4 Transit Time Ratio

Transit Time Ratio indicates if the transducer mounting spacing is accurate. The normal transit time ratio should be 100 +/- 3 if the transducers were installed properly. Check it in the Diagnostics Menu.

Attention

If the transit time ratio is over 100 ± 3%, it is necessary to check:

(1) If the parameters (pipe outside diameter, wall thickness, pipe material, liner, etc.) have been entered correctly,

(2) If the transducer mounting spacing is in accordance with the display in the Calibration Menu,

(3) If the transducer is mounted at the pipe's centerline on the same diameter,

(4) If the scale is too thick or the pipe mounting is distorted in shape, etc.

3.3.5 Warnings

(1) Pipe parameters entered must be accurate; otherwise the flow meter will not work properly.

(2) During the installation, apply enough coupling compound to stick the transducers onto the pipe wall. While checking the signal strength and Q value, move the transducers slowly around the mounting site until the strongest signal and maximum Q value can be obtained. Make sure that the larger the pipe diameter, the more the transducers should be moved.

(3) Check to be sure the mounting spacing is in accordance with the display in the Calibration Menu and the transducer is mounted at the pipe's centerline on the same diameter.

(4) Pay special attention to pipes formed by steel rolls (pipe with seams), since such pipe is always irregular. If the signal strength is always displayed as 0.00, that means there is no signal detected. Thus, it is necessary to check that the parameters (including all the pipe parameters) have been entered accurately. Check to be sure the transducer mounting method has been selected properly, the pipe is not worn-out, and the liner is not too thick. Make sure there is fluid in the pipe, the transducer is not too close to a valve or elbow, there are not too many air bubbles in the fluid, etc. If there is still no signal detected after checking these reasons, the measurement site needs to be changed.

(5) Make sure that the flow meter is able to run properly with high reliability. The stronger the signal strength displayed, the higher the Q value reached. The longer the flow meter runs accurately, the higher the reliability of the flow rates displayed. If there is interference from ambient electromagnetic waves or the signal detected is too poor, the flow value displayed is not reliable; consequently, the capability for reliable operation is reduced.

(6) After the installation is complete, power on the instrument and check the results accordingly.

4. Display & Menus

4.1 Display & Keypad

4.1.1 Keypad Functions

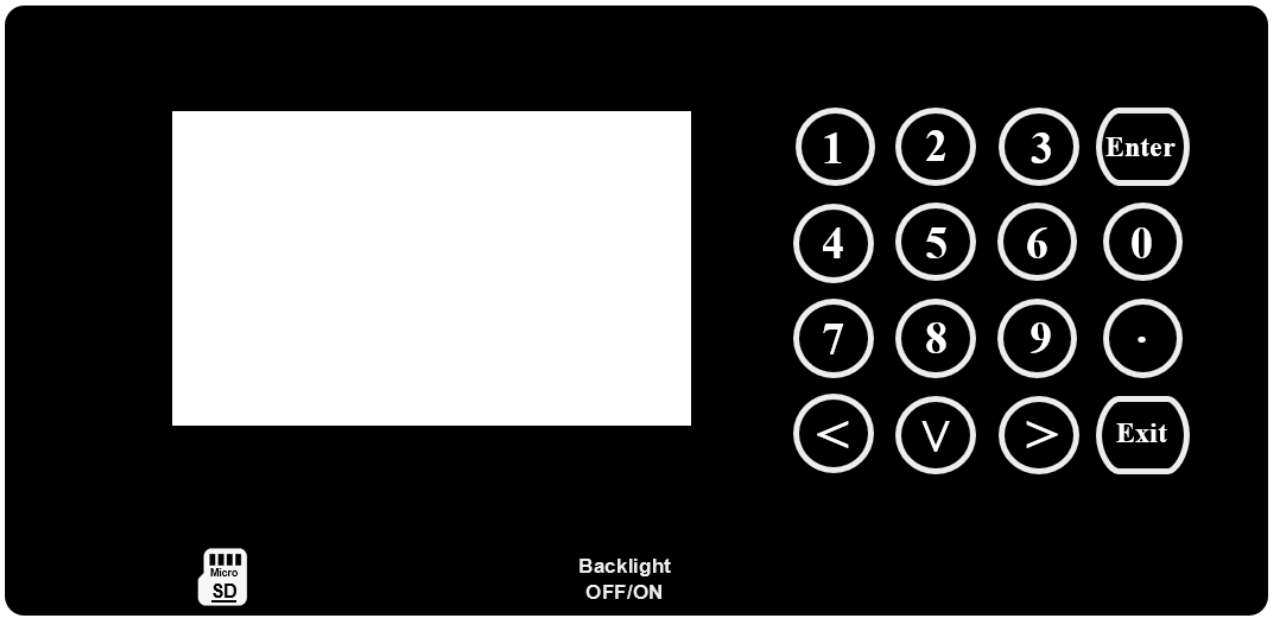

Numbers “0~9” and . input numbers or codes.

Exit goes back to the previous menu.

V opens the next menu.

Enter selects a menu or value.

4.1.2 Keypad Operation

The flow meter’s digital electronics allow you to set, adjust, and monitor system parameters and performance. A full range of commands are available through the display/keypad. The LCD display shows flow monitoring and programming. The multiple run screens are arranged in a loop that can be viewed after entering the password and using the < V > buttons. If you want to modify the parameters, press Enter first, input the digits, then press Enter again to confirm.

Attention

Generally, press Enter key first if the operator wants to enter "modify" status. To unlock it, enter the password.

4.2 Using the Setup Menus

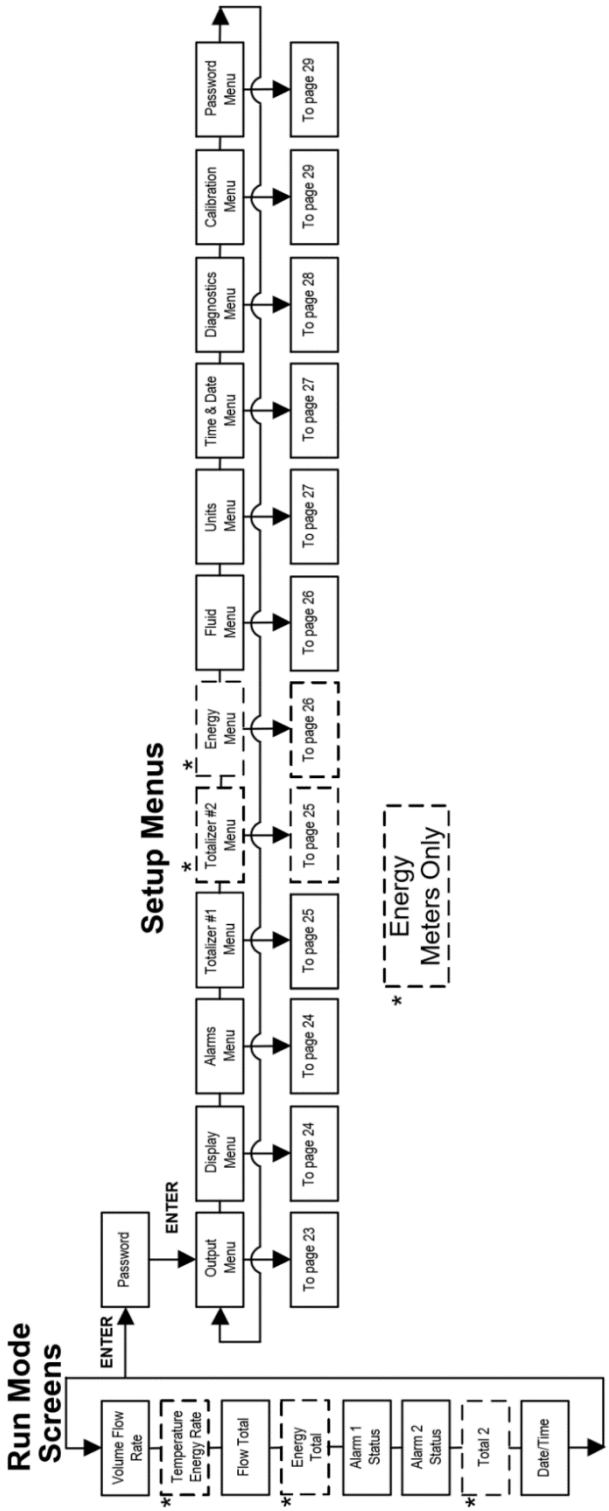

4.2.1 Programming the Flow Meter

1. Enter the Setup Menu by pressing the ENTER key until prompted for a password. (All outputs are disabled while using the Setup Menus.)
2. Use the number keys to enter the password (1234 is the factory-set password). When the password is correctly displayed, the Setup Menus will be displayed.
3. Use the Setup Menus described on the following pages to customize the multi-parameter features for your ultrasonic flow meter. Some items depicted in the graphic on the preceding page may not be displayed based on flow meter configuration and settings.
4. To activate a parameter, press ENTER. Use the < ∨ > keys to make selections or enter using number keys. Press ENTER to continue. Press EXIT to save or discard changes and return to Run Mode.
5. **Program the UNITS menu first because later menus will be based on the units selected.**

4.2.2 Output Menu

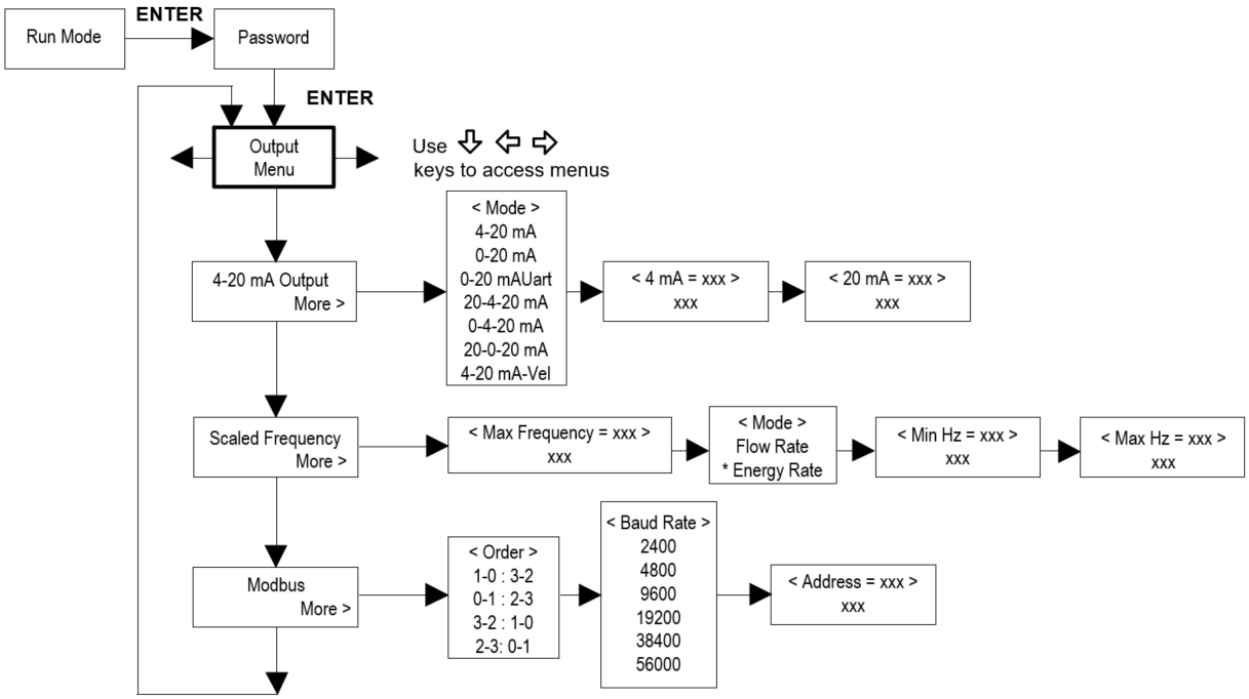

4.2.3 Display Menu

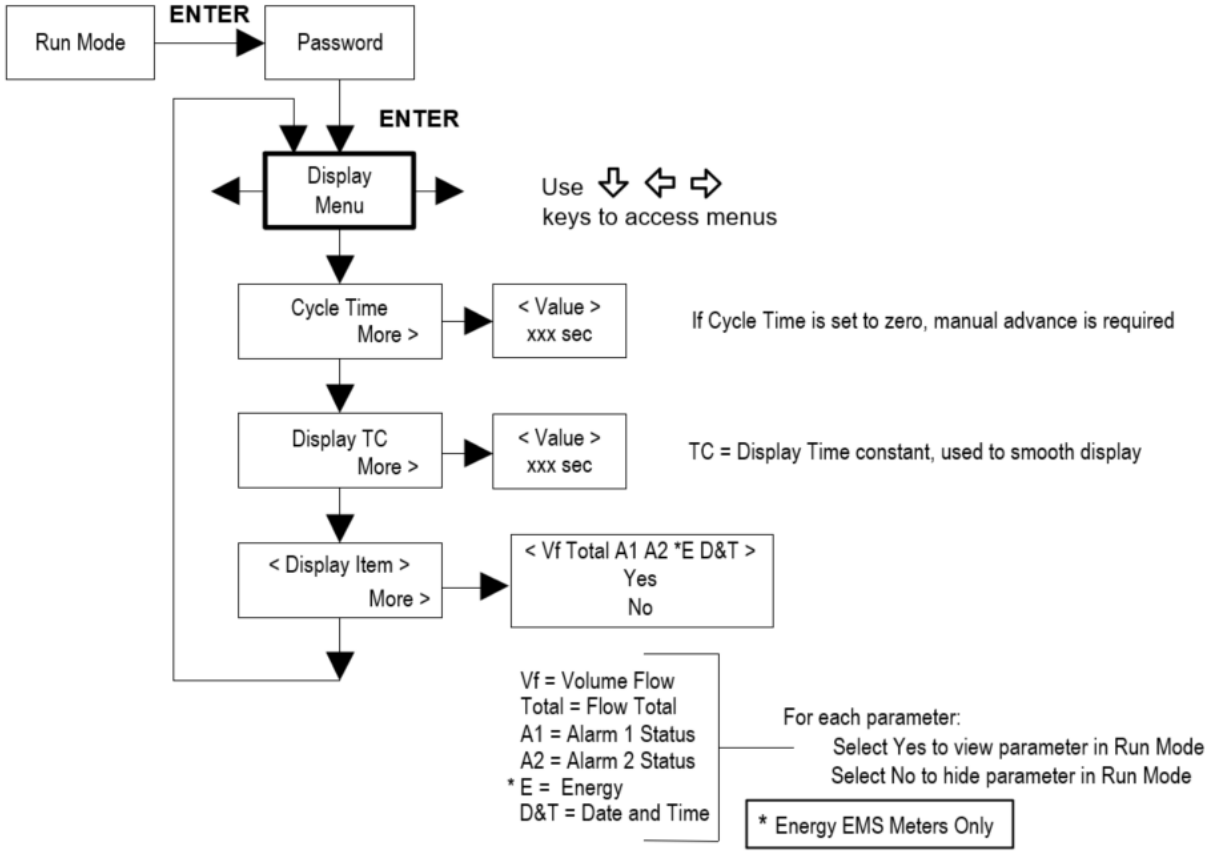

4.2.4 Alarms Menu

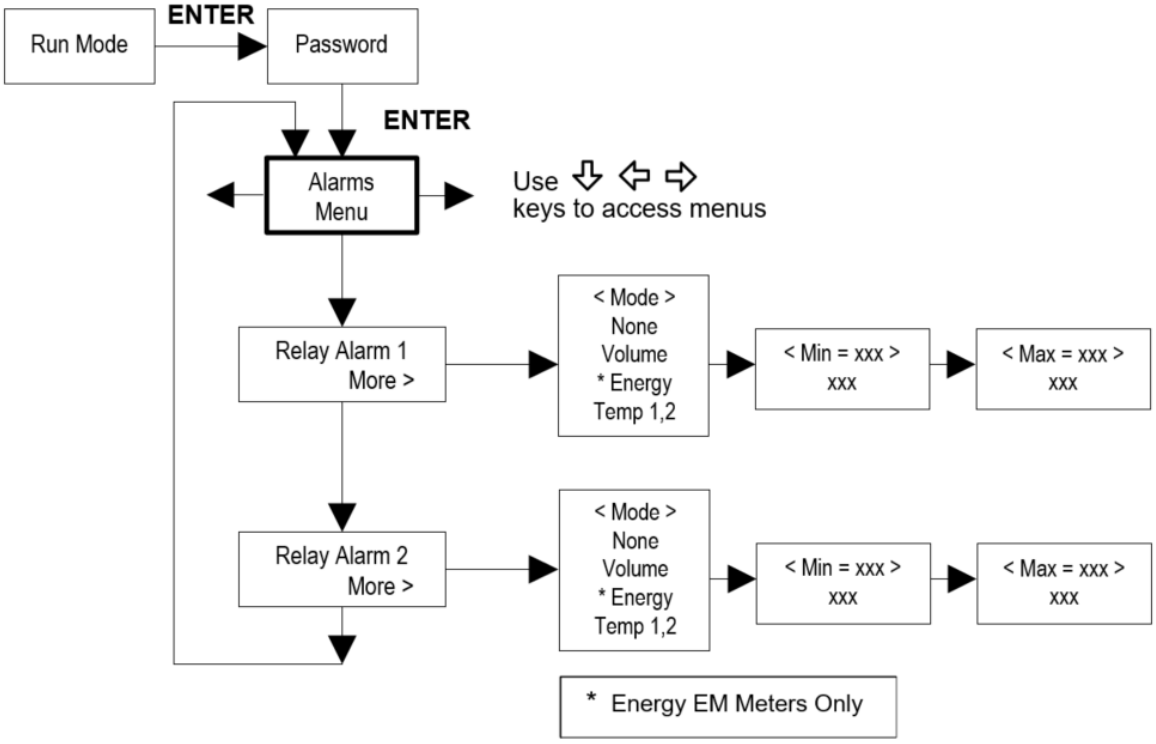

4.2.5 Totalizer #1 Menu

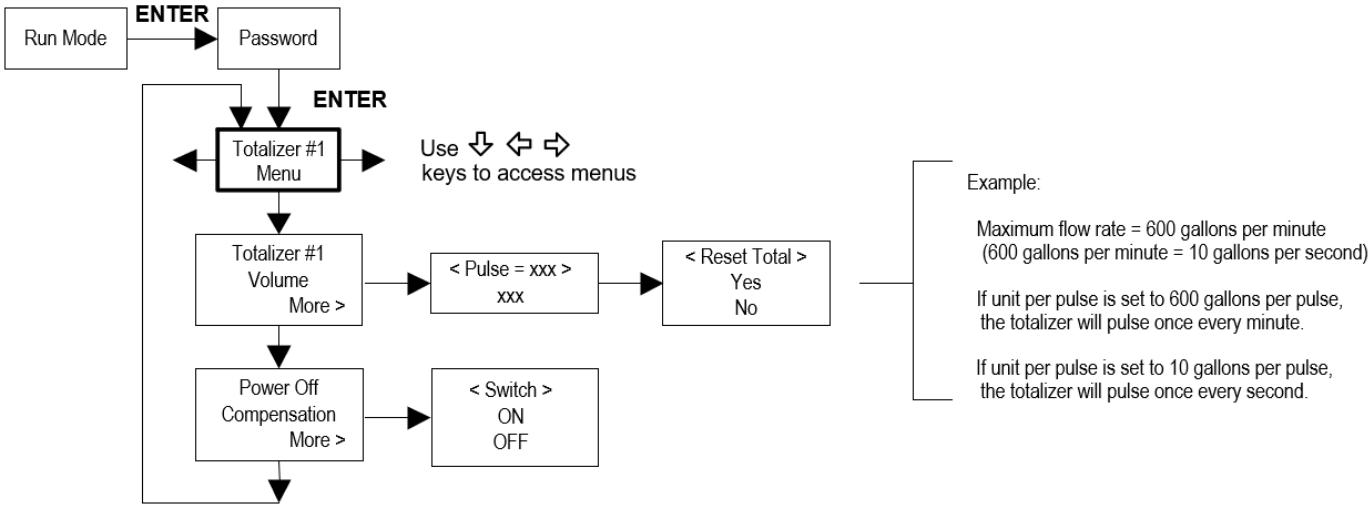

4.2.6 Totalizer #2 Menu

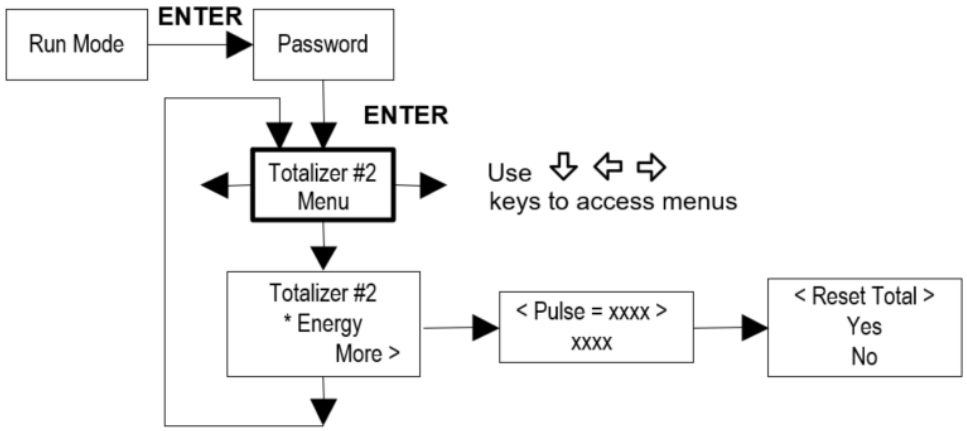

4.2.7 Energy Menu

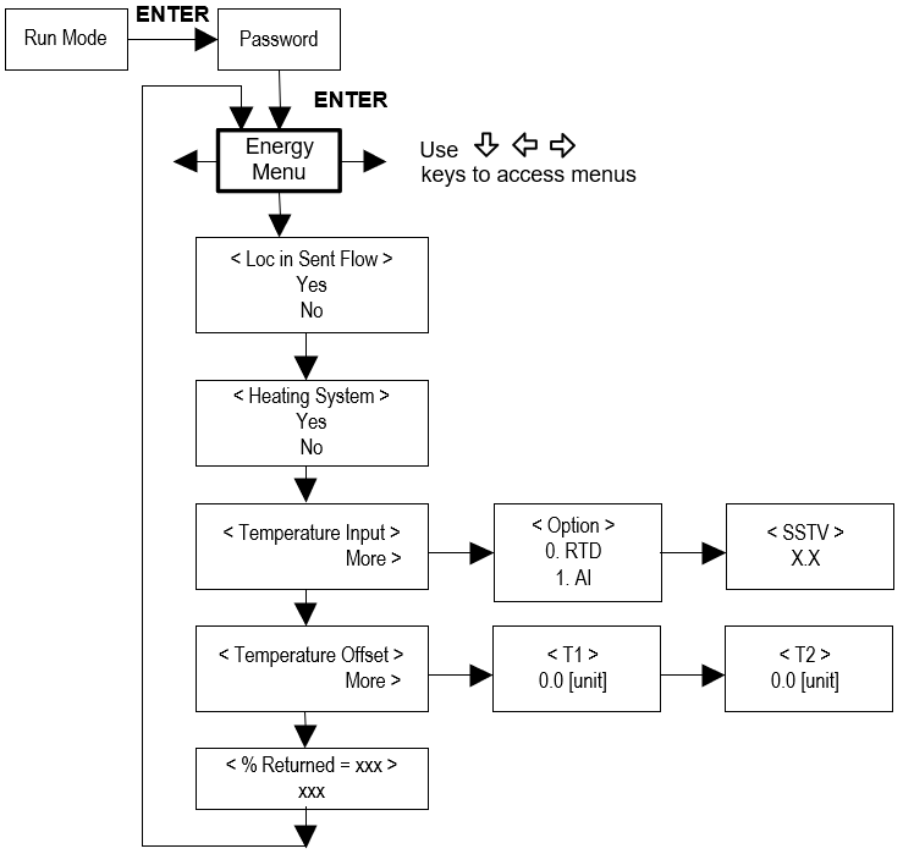

4.2.8 U42 Fluid Menu

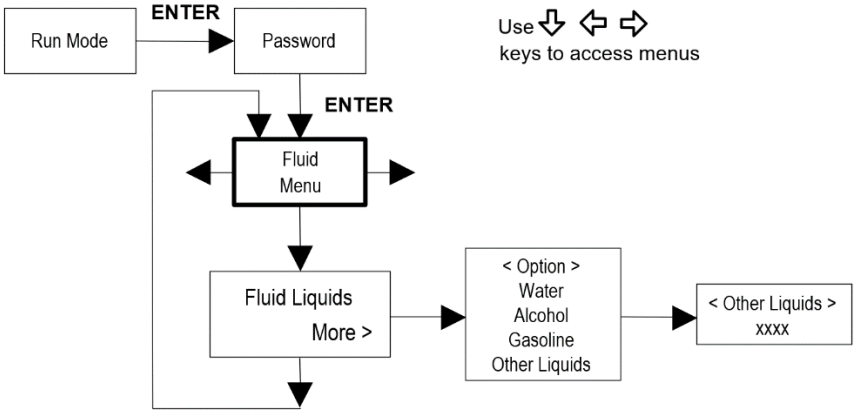

4.2.9 U43 Fluid Menu

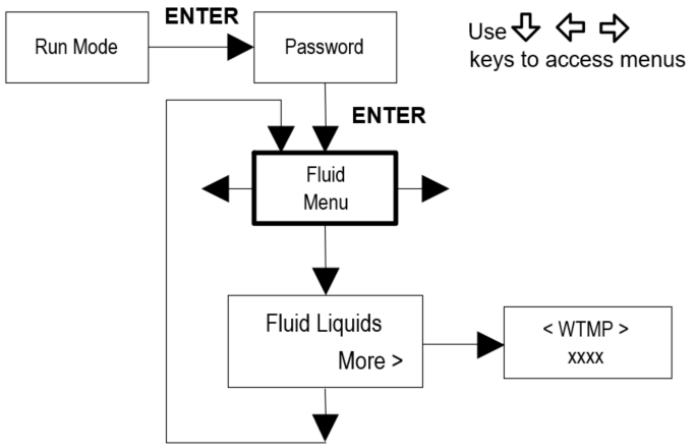

4.2.10 Units Menu

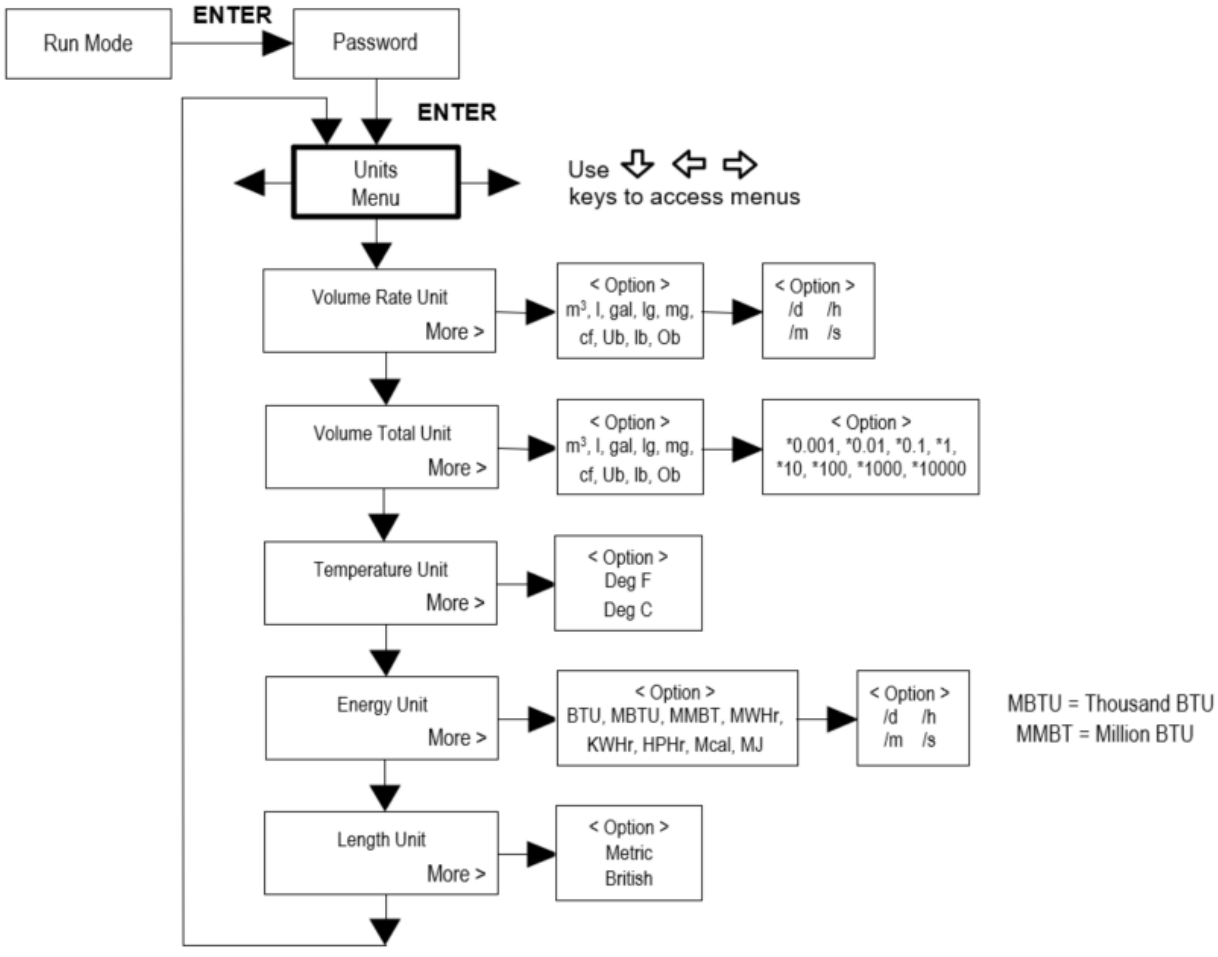

4.2.11 Time & Date Menu

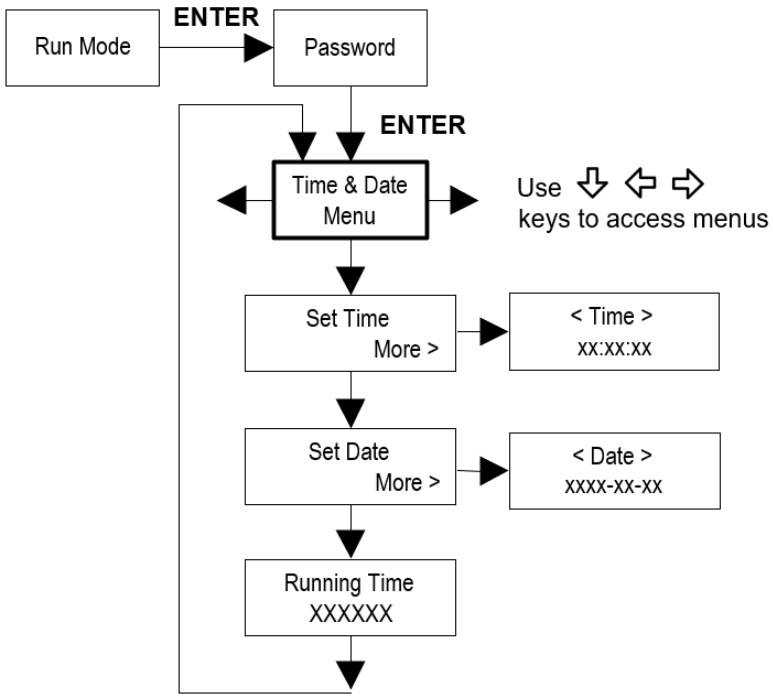

4.2.12 Diagnostics Menu

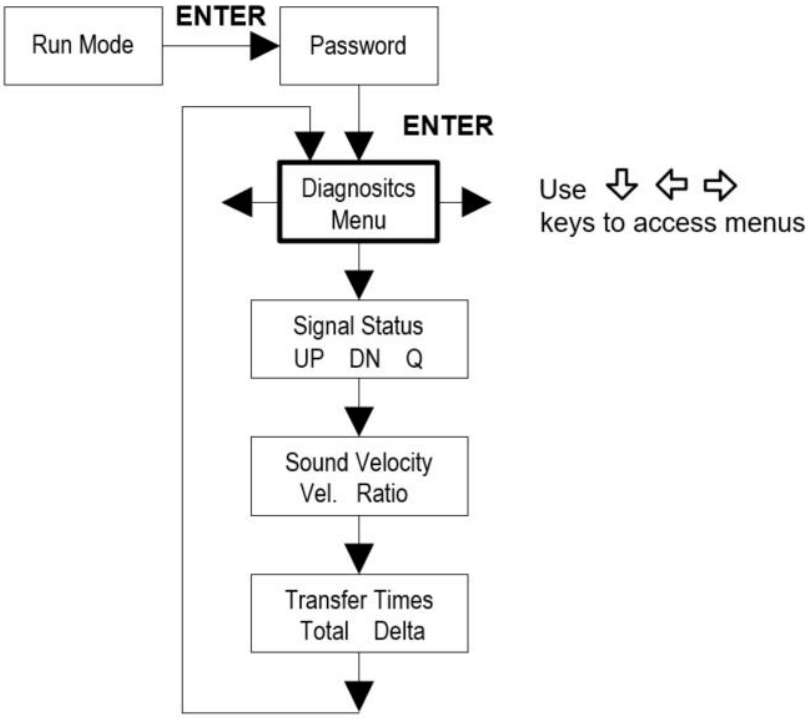

4.2.13 Calibration Menu

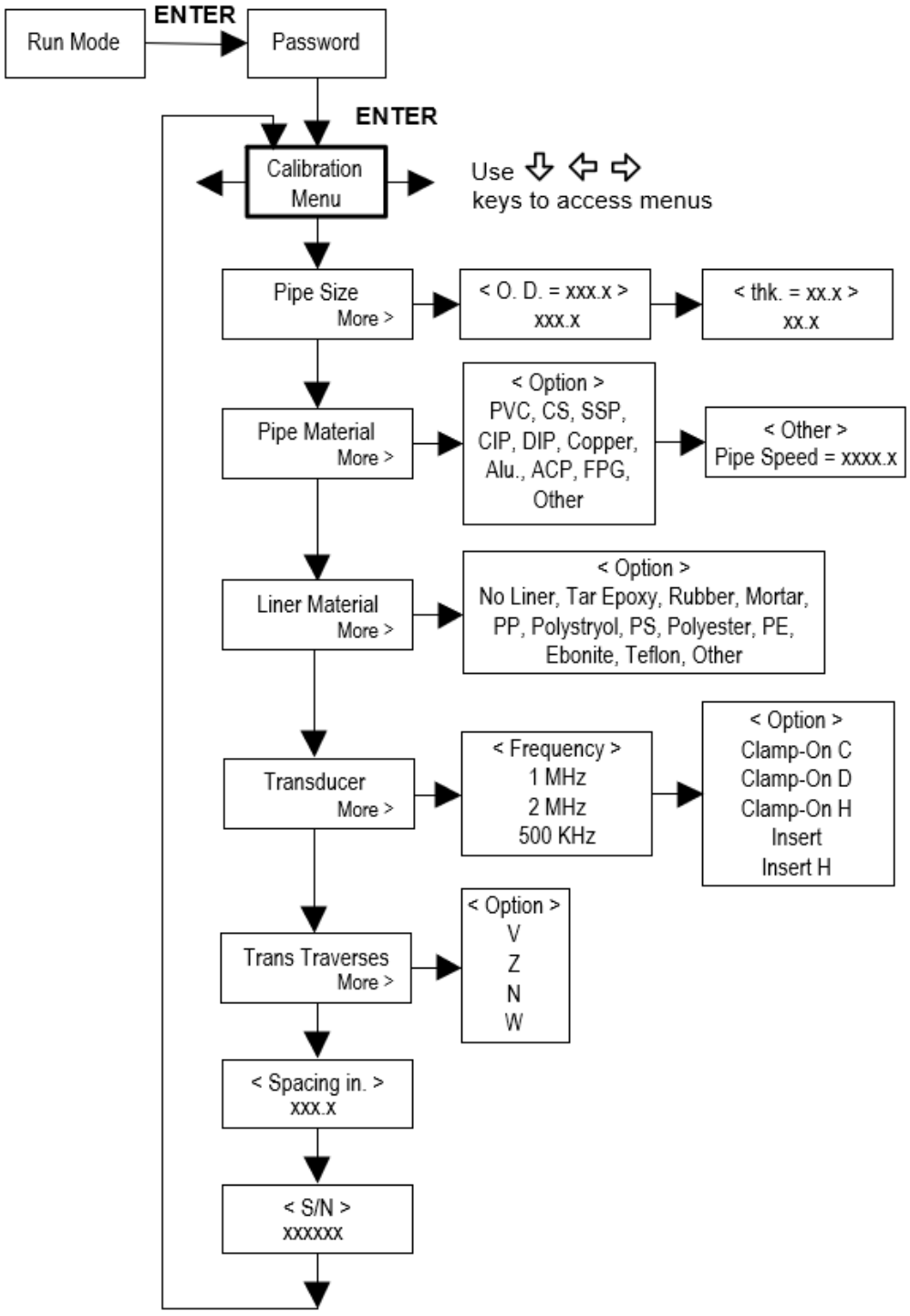

4.2.14 Password Menu

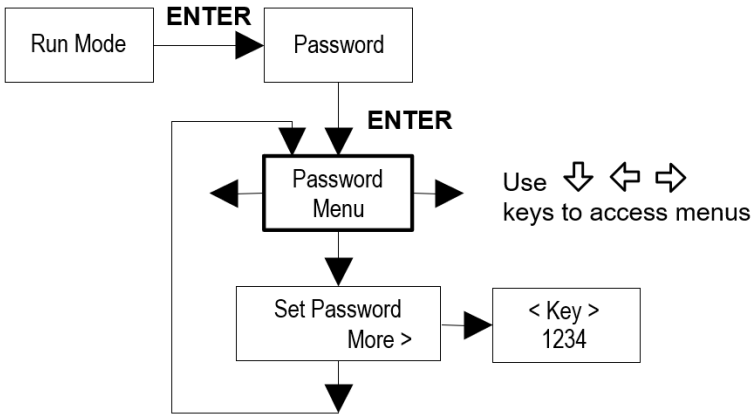

4.2.15 Engineer Menu

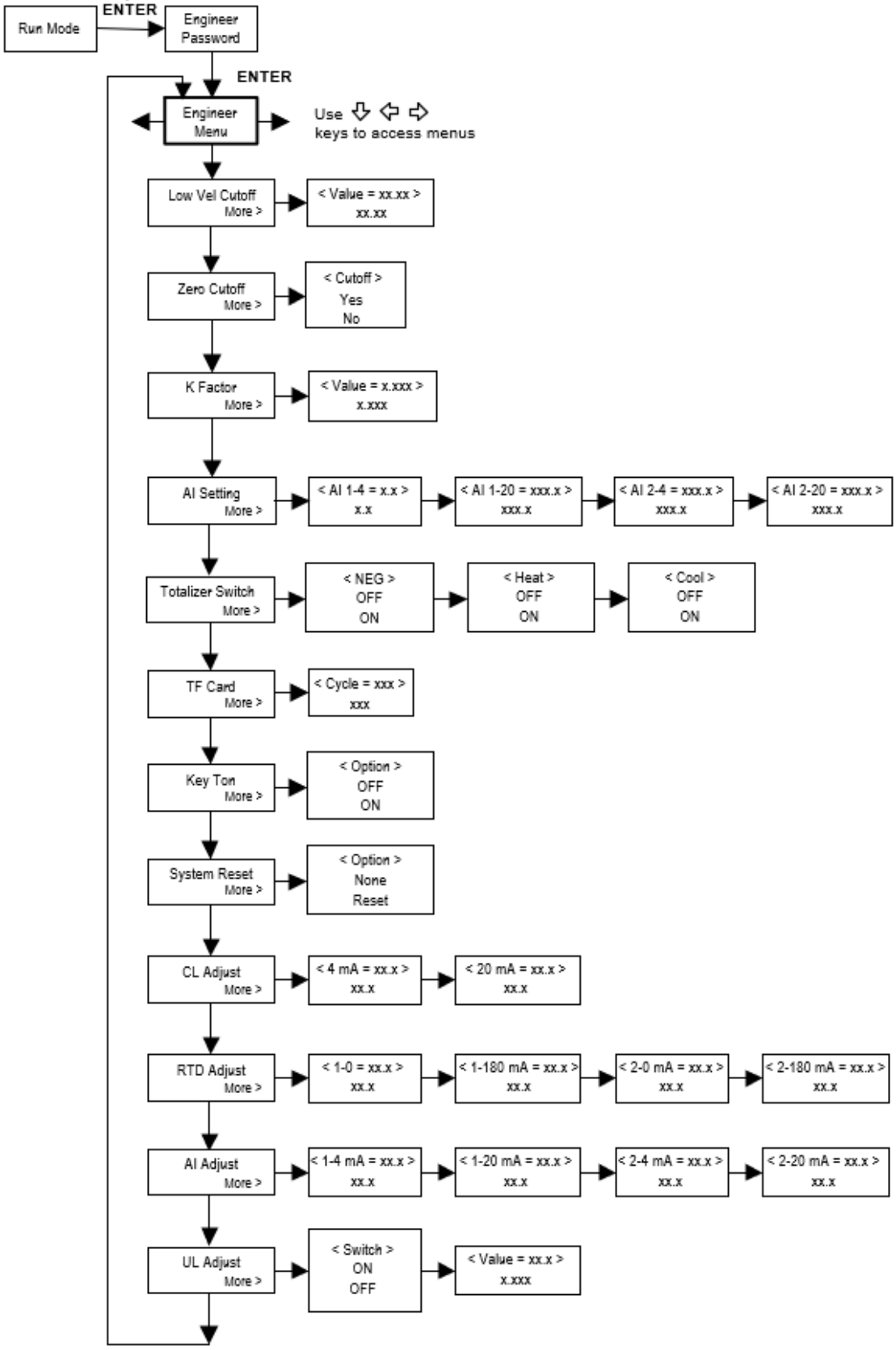

4.2.16 Engineer Menu 2

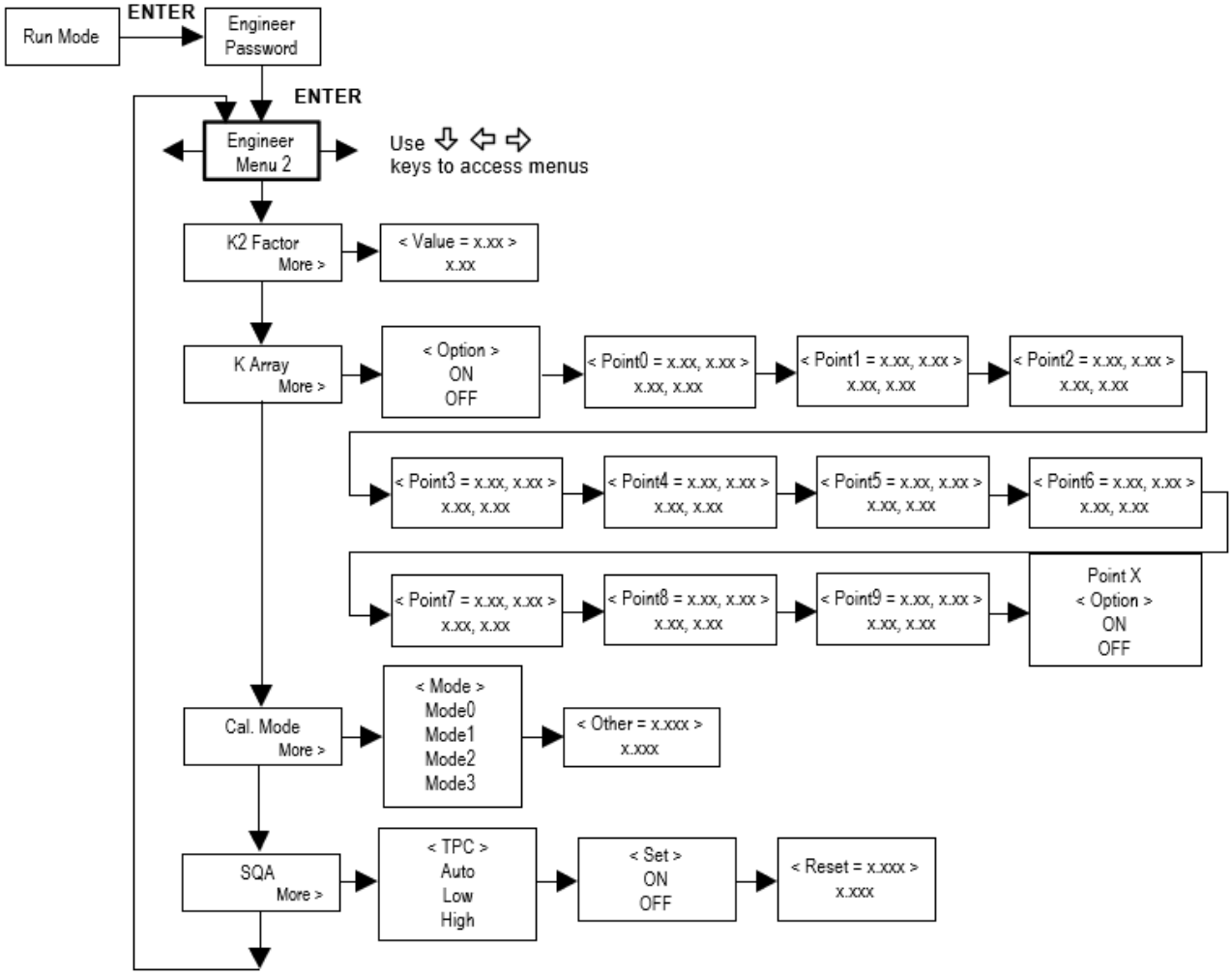

5. Operation Instructions

5.1 System Normal Identification

If the letter "*R" displays on the screen, it indicates system normal.

If the letter "D" is displayed, it indicates the system is adjusting the signal gain prior to the measurement. It means system normal. Only when the adjustment takes too long without stopping can the system be identified as abnormal.

If the letter "E" is displayed, it indicates that no signal is being detected. Check the transducer wiring connections are correct, the transducers are installed firmly, etc.

For further information, please refer to "Error Diagnosis".

5.2 Low Velocity Cutoff Value

The low velocity cutoff value can be found in the Engineer Menu. If the flow rate falls below the low velocity cutoff value, the flow indication is driven to zero. This function can prevent the flow meter from displaying flow as "0" after a pump was shut down, but there is still liquid movement in the pipe, which will result in cumulative error. Generally, 0.03 m/s is recommended to enter as the low velocity cutoff point.

The low velocity cutoff value has no relation to the measurement results once the velocity increases over the low velocity cutoff value.

5.3 Zero Settings

Once zero flow occurs, a zero point may be indicated on each measuring instrument, but the displayed measuring value is not equal to "0". This value indicates "Zero". To any measuring instrument, the smaller the "Zero" is, the better the quality is. Conversely, if the "Zero" is too big, that indicates the quality of the instrument is poor.

If the zero-set point is not at true zero flow, a measurement difference may occur. The smaller the physical measurement capacity is, the larger the measurement difference from the zero point will exist. Only when the zero point is reduced to a definite degree, as compared with the physical measurement capacity, can the measuring difference from the zero point be ignored.

For an ultrasonic flow meter, the measurement error from the zero point cannot be ignored under low flow conditions. It is necessary to perform a static zero set calibration to improve low flow measurement accuracy.

Cutoff Zero

In Engineer Menu – Zero Cutoff. The menu will show the “success” and back to the Run Mode Screen when you cut off the zero point successfully.

5.4 Scale Factor

Scale factor refers to the ratio between "actual value" and "reading value". For example, when the measurement is 2.00, and it is indicated as 1.98 on the instrument, the scale factor reading is 2/1.98. This means that the best scale factor constant is 1. However, it is difficult to keep the scale factor as "1" on the instrument especially in batch productions. The difference is called "consistency".

During operation, there still exists a possible difference in pipe parameters, etc. The "scale factor" may be necessary when used on different pipes. Thus, scale factor calibration is specially designed for calibrating the differences that result from application on different pipes. The scale factor entered must be one that results from actual flow calibration. The scale factor can be input in the Engineer Menu.

5.5 System Lock

System lock is intended to prevent operation error due to tampering by unauthorized personnel.

The Password Menu is for system lock. Unlock it by using the selected password only. If "lock" is displayed on the screen, then enter the correct password.

Keep the password in mind or recorded in a safe place, otherwise the instrument cannot be used.

5.6 Active 4 - 20 mA Current Loop Output

With a current loop output exceeding an accuracy of 0.1%, the flow meter is programmable and configurable with outputs such as 4 - 20 mA or 0 - 20 mA selected in the Output Menu. For details, please refer to the Output Menu in "Display & Menus".

In Output Menu – 4 mA Output – 4 mA, enter a 4 mA flow value. Enter the 20 mA flow value in Output Menu – 4 mA Output – 20 mA. For example, if the flow range in a specific pipe is 0 ~ 1000 m^3/h, enter 0 and 1000 in Output Menu – 4 – 20 mA Output. If the flow ranges from -1000 ~ 0 ~ 2000 m^3/h, configure the 20 - 4 - 20 mA output by selecting in Output Menu when flow direction is not an issue. Enter 1000 in Output Menu – 4 mA Output – 4 mA and 2000 in Output Menu – 4 mA Output – 20 mA. When flow direction is an issue, module 0 - 4 - 20 mA is available. When the flow direction displays as negative, the current output is in range of 0 - 4 mA, whereas the 4 - 20 mA is for the positive direction. The output module options are displayed in the Output Menu.

Calibrating and testing the current loop is performed in Output Menu – 4 - 20 mA Output. Complete the steps as follows:

Use < and > to switch menus. Select the 4 mA or 20 mA outputs by pressing ENTER, connecting an ammeter to test the current loop output and calculate the difference.

5.7 Frequency Output

The flow meter is provided with a frequency output transmitter function. The high or low frequency output displayed indicates the high or low flow rate reading. The user can reset the frequency output as well as flow rate to the user's actual requirements.

For example: if a pipe flow range is 0 ~ 5000 m^3/h, the relative frequency output required is 100 ~ 1000 Hz, and the configuration is as follows:

In Output Menu – Scaled Frequency – Min Hz (lower limit frequency output flow value), input 0;

In Output Menu – Scaled Frequency – Max Hz (upper limit frequency output flow value), input 5000;

In Output Menu – Scaled Frequency – Max Frequency (frequency range), input 1000;

Typical Open Collector Transistor (OCT) Output wiring diagram as below:

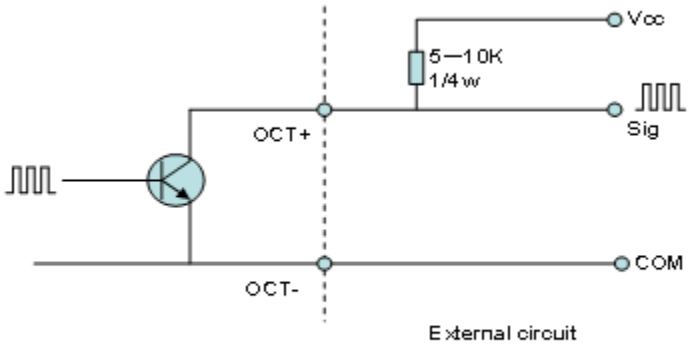

OCT Output wiring diagram

5.8 Totalizer Pulse Output

Each time the flow meter reaches a unit flow, it may generate a totalizer pulse output to a remote counter.

The totalizer pulse output can be transmitted through Open Collector Transistor (OCT) or a relay. Therefore, it is necessary to configure OCT and the relay accordingly. (Refer to Totalizer #1 Menu). For example, if it is necessary to transmit the positive totalizer pulse through a relay, and each pulse represents a flow of 10 m^3, the configuration is as follows:

In Units Menu – Volume Total Unit, select the totalizer flow unit "m^3";

In Totalizer #1 Menu – Pulse, select the scale factor "e. x10";

Attention

Make sure to select an appropriate totalizer pulse. If the totalizer pulse is too big, the output cycle will be too long. If the totalizer is too small, the relay will operate too quickly, you may shorten the life of the relay, as well as skip some pulses. The totalizer is recommended to transmit within the range of 1 ~ 3 pulse per second.

5.9 Alarm Programming

The on-off output alarm is generated through Open Collector Transistor (OCT) or transmission to an external circuit by opening or closing a relay. The on-off output signal is activated under the following conditions:

(1) Signal not detected;
(2) Poor signal detected;
(3) The flow meter is not ready for normal measurement;
(4) The flow is in the reverse direction (back flow);
(5) The analog outputs exceed span by 120%;
(6) The frequency output exceeds span by 120%;
(7) The flow rate exceeds the ranges configured (configure the flow ranges using the software alarm system). There are two software alarms: Alarm #1 and Alarm #2.

Example 1: When flow rate exceeds 300 ~ 1000 m^3/h, in order to program the relay output alarm, complete the steps as follows:

(1) In Alarms Menu – Relay Alarm 1 – Mode, Volume;
(2) In Alarms Menu – Relay Alarm 1 – Min, 300;

(3) In Alarms Menu – Relay Alarm 1 – Max, 1000

5.10 Active 4 - 20 mA Analog Output Calibration

Attention

Each flow meter has been calibrated strictly before leaving the factory. It is unnecessary to carry out this step except when the current value (detected while calibrating the current loop) displayed in Engineer Menu – CL Adjust is not identical with the actual output current value.

The hardware detect window must be activated prior to calibrating the Analog Output. The procedure is as follows:

Engineer Menu – CL Adjust is for 4 - 20 mA calibration. If you need to enter the password, enter it. With no effect to next power on, this menu will close automatically as soon as the power is turned off.

Use the number keys to switch calibrate the current loop 4 mA output. Use an ammeter to measure the output of the current loop and adjust the displayed numbers at the same time. Watch the ammeter until it reads 4.00. Stop at this point, the 4 mA output has been calibrated.

Use the number keys to switch calibrate the current loop 20 mA output. The method is the same as the 4 mA calibration.

The results are automatically saved in EEPROM and won't be lost when the power is turned off.

5.11 SD Card Operation

5.11.1 Specifications

Data collection interval: any interval settings from 1 to 3600 seconds are OK according to the requirements.

Data content: date and time, flow rate, flow velocity, total flow, positive totalizer, negative totalizer.

Data storage format:

a = 2017-11-16, 16:21:12
b = + 2.652471 E+00 m^3/h
c = + 9.380460 E-02 m/s
d = + 3.520580 E+02 m^3
e = + 3.520580 E+02 m^3
f = + 0.000000 E+00 m^3
g = + 0.000000 E+00 m^3
h = + 0.000000 E+00 GJ
i = + 0.000000 E+00 GJ
j = + 0.000000 E+00 C
k = + 0.000000 E+00 C
File system format: FAT16.
File type: plain test file (.TXT).
File number: maximum 512 pcs.

It can save 120 bytes of data each time. If it is set to save once every 5 seconds, the capacity of storing file in 24 hours is 120*3600/5*24 = 2073600 byte ≈ 2.1 Mbyte, therefore, 1 Gb SD card can store for days: 1024/2.1 = 487.6 ≈ 487 days. When the capacity of the SD card is full, the new data will override the earliest files automatically.

5.11.2 Install or Remove the SD Card While the Meter is Powered On

If the operator desires to insert the SD card with power on, please turn off the power. The following operation is to be used:

Attention:

Do not remove the SD card from the reader while actively working with the data. Data should be saved and stored in a separate location on the PC, and then processed from that file location. Processing the data directly from the SD card file location on the PC could result in losing or destroying data if the SD card is removed while still being processed.

5.12 ESN

We provide the flow meter with a unique electronic serial number to identify each flow meter for the convenience of the manufacturer and customers. The ESN, instrument types, and versions are viewable in the Engineer Menus.

6. Error Diagnosis

The ultrasonic flow meter has advanced self-diagnostic functions and displays any errors in the upper right corner of the LCD via definite codes in a date/time order. Some errors can be detected during normal operation. Undetectable errors caused by unskilled operation, incorrect settings, and unsuitable measurement conditions can be displayed accordingly during work. This function helps the user detect the errors and find causes quickly. Thus, problems can be solved in a timely manner according to the solutions listed in the following table.

If a problem still exists, please contact the factory or the factory's local representative for assistance.

6.1 Error Codes and Solutions

Codes	The upper right corner of the screen	Causes	Solutions
*R	System Normal	* System normal.	
*E	Signal Not Detected	* Signal not detected. * Spacing is not correct between the transducers or not enough coupling compound was applied to face of transducers. * Transducers installed improperly. * Scale is too thick. * New pipe liner.	* Attach transducer to the pipe and tighten it securely. Apply plenty of coupling compound onto transducer and pipe wall. * Remove any rust, scale, or loose paint from the pipe surface. Clean it with a file. *Check the initial parameter settings. * Remove the scale or change the scaled pipe section. Normally, it is possible to change a measurement location. The instrument may run properly at a new site with less scale. * Wait until liner is solidified and saturated.
*D	Adjusting Gain	* Adjusting gain for normal measurement.	

6.2 Frequently Asked Questions

Question: New pipe, high quality material, and all installation requirements met: why is there still no signal detected?

Answer: Check pipe parameter settings, installation method, and wiring connections. Confirm if the coupling compound is applied adequately, the pipe is full of liquid, transducer spacing agrees with the screen readings, and the transducers are installed in the right direction.

Question: Old pipe with heavy scale inside, no signal or poor signal detected: how can it be resolved?

Answer: Check if the pipe is full of fluid. Try the Z method for transducer installation (if the pipe is too close to a wall, or it is necessary to install the transducers on a vertical or inclined pipe with flow upwards instead of on a horizontal pipe).

Carefully select a good pipe section and fully clean it, apply a wide band of coupling compound on each transducer face (bottom) and install the transducer properly.

Slowly and slightly move each transducer with respect to each other around the installation point until the maximum signal is detected. Be careful that the new installation location is free of scale inside the pipe and that the pipe is concentric (not distorted) so that the sound waves do not bounce outside of the proposed area.

For pipe with thick scale inside or outside, try to clean the scale off if it is accessible from the inside. (Note: Sometimes this method might not work, and sound wave transmission is not possible because of a layer of scale between the transducers and pipe inside wall).

Question: Why is the CL output abnormal?

Answer: Check to see if the desired current output mode is set in Output Menu – 4 - 20mA Output.

Check to see if the maximum and minimum current values are set properly. Re-calibrate CL in Engineer Menu – CL Adjust.

Question: Why is the flow rate still displayed as zero while there is fluid obviously inside the pipe and a symbol of "R" displayed on the screen?

Answer: Check to see if "Set Zero" was carried out with fluid flowing inside the pipe (Refer to Engineer Menu).

If it is confirmed, recover the factory default in Engineer Menu – System Reset – Reset.

7. Appendix 1 – Serial Interface Network Use and Communications Protocol

7.1 Overview

The flow meter has perfect communication protocol. It can also be connected to a RS-485 Modbus.

Two basic schemes can be chosen for networking, i.e. the analog current output method only using the flow meter or the RS-232 communication method via serial port directly from the flow meter. This method is suitable to replace dated instruments in old monitoring networks. The later method is used in new monitoring network systems. It has advantages including low hardware investment and reliable system operation.

When the serial port communications method is directly used to implement a monitoring network system, the address identification code of the flow meter is used as a network address code. Expanded command set with [W] is used as communication protocol.

RS-232 (Cable length 0 ~ 15 m) or RS-485 (cable length 0 ~ 1000 m) can be directly used for data transmission links for a short distance. Current loop can be used in medium or long-distance transmission.

When the flow meter is used in a network environment, various operations can be performed by a host device, except for programming of the address identification code, which needs to be done via the flow meter keyboard.

The command answer mode is used in data transmission, i.e. the host device issues commands and the flow meter answers correspondingly.

The common/special flow/thermal data monitoring system developed by our company can be used for flow data collection. Based on characteristics of the flow meter, the system makes full use of software and hardware designs with flow meter features. The system is simple, clear, economical, and reliable in operation.

Attention

In the communication protocol used functions, RS-232 and RS-485 serial communications cannot be used at the same time.

7.2 Serial Port Definition

Flow meter – RS-232:

TXD send
RXD receive
GND ground

PC:

PIN 1 empty
PIN 2 RXD send
PIN 3 TXD send
PIN 4 ground
PIN 5 ground
PIN 6 empty
PIN 7 empty
PIN 8 empty
PIN 9 empty

7.3 Direct Connection via RS-232 to the Host Device

See the below list of flow meter serial port definitions.

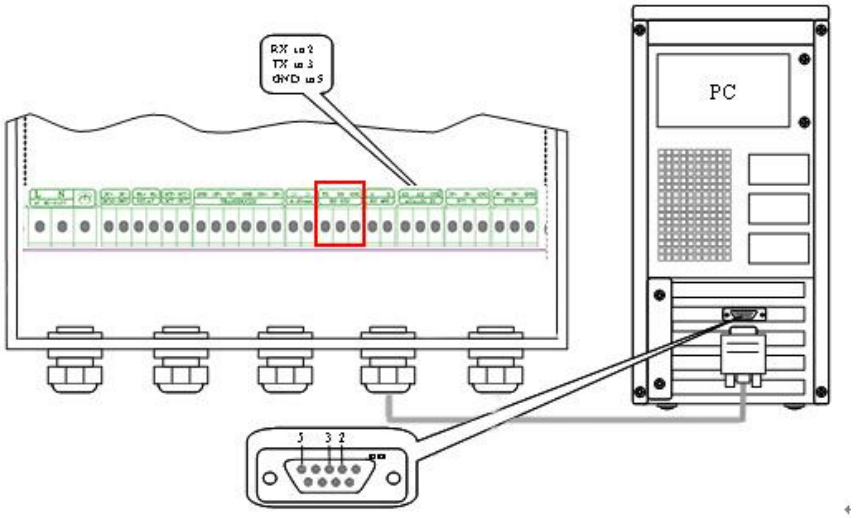

7.4 MODBUS Communications Protocol and Use

The flow meter supports MODBUS-1 communications protocol.

This MODBUS-I Protocol uses RTU transmission mode. The Verification Code uses CRC-16-IBM (polynomial is X16+X15+X2+1, shield character is 0xA001) which is gained by the cyclic redundancy algorithm method.

MODBUS-I RTU mode uses hexadecimals to transmit data.

1. MODBUS-I Protocol Function Code and Format

The flow meter protocol supports the following two-function codes of the MODBUS:

Function Code	Performance data
0x03	Read register
0x06	Write single register

2. MODBUS Protocol function code 0x03 usage

The host sends out the read register information frame format:

Slave Address	Operation Function Code	First Address Register	Register Number	Verify Code
1 byte	1 byte	2 bytes	2 bytes	2 bytes
0x01 ~ 0xF7	0x03	0x0000 ~ 0xFFFF	0x0000 ~ 0x7D	CRC (Verify)

The slave returns the data frame format:

Slave Address	Read Operation Function Code	Number of Data Bytes	Data Bytes	Verify Code
1 byte	1 byte	1 byte	N*x2 byte	2 bytes
0x01 ~ 0xF7	0x03	2xN*	N*x2 (Data)	CRC (Verify)

N* = Data register number

3. MODBUS Protocol function code 0x06 usage

The host sends a command to write a single register information frame format (function code 0x06):

Slave Address	Operation Function Code	Register Address	Register Data	Verify Code
1 byte	1 byte	2 bytes	2 bytes	2 bytes
0x01 ~ 0xF7	0x06	0x0000 ~ 0xFFFF	0x0000 ~ 0xFFFF	CRC (Verify)

The slave returns the data frame format (function code 0x06):

Slave Address	Operation Function Code	Register Address	Register Data	Verify Code
1 byte	1 byte	2 bytes	2 bytes	2 bytes
0x01 ~ 0xF7	0x06	0x0000 ~ 0xFFFF	0x0000 ~ 0xFFFF	CRC (Verify)

The range of flow meter addresses 1 to 247 (Hexadecimal: 0x01 ~ 0xF7) and can be checked in the Output Menu. For example, decimal number "11" displayed in Output Menu – Modbus means the address of the flow meter in the MODBUS protocol is 0x0B.

The CRC Verify Code adopts CRC-16-IBM (polynomial is $X^{16}+X^{15}+X^2+1$, shield character is 0xA001) which is gained by the cyclic redundancy algorithm method. Low byte of the verify code is at the beginning while the high byte is at the end.

For example, to read the address 1 (0x01) in the RTU mode, if the instantaneous flow rate uses hour as a unit (m^3/h, namely reads 40005 and 40006 registers data), the read command is as follows:

0x01	0x03	0x00 0x04	0x00 0x02	0x85 0xCA
Flow Meter Address	Function Code	First Address Register	Numbers	CRC Verify Code

Flow meter returned data is (assuming the current flow = 1.234567 m^3/h)

0x01	0x03	0x04	0x06 0x51 0x3F 0x9E	0x3B 0x32
Flow Meter Address	Function Code	Data Bytes	Data (1.2345678)	CRC Verify Code

The four bytes 3F 9E 06 51 is in the IEEE754 format single precision floating point form of 1.2345678.

Pay attention to the data storage order of the above example. Using C language to explain the data, pointers can be used directly to input the required data in the corresponding variable address, the low byte will be put at the

beginning, such as the above example 1.2345678 m/s, 3F 9E 06 51 data stored in order as 51 06 9E 3F.

For example, it converts the address 1 (0x01) to 2 (0x02) under the RTU mode, so to write the data of flowmeter 44100 register as 0x02, the write command is as follows:

0x01	0x06	0x10 0x03	0x00 0x02	0xFC 0xCB
Flow Meter Address	Function Code	Register Address	Register Number	CRC Verify Code

Flow meter returned data is:

0x01	0x06	0x10 0x03	0x00 0x02	0xFC 0xCB
Flow Meter Address	Function Code	Register Address	Register Number	CRC Verify Code

4. Error Check

The flow meter only returns one error code 0x02 which means data first address in error.

For example, to read address 1 (0x01) of the flowmeter 40002 register data in the RTU mode, the flowmeter considers it to be invalid data, and sends the following command:

0x01	0x03	0x00 0x01	0x00 0x01	0xD5 0xCA
Flow Meter Address	Function Code	Register Address	Register Number	CRC Verify Code

Flow meter returned error code is:

0x01	0x83	0x02	0xC0 0xF1
Flow Meter Address	Error Code	Error Extended Code	CRC Verify Code

5. MODBUS Register Address List

The flow meter MODBUS Register has a read register and a write single register.

a) Read Register Address List (use 0x03 function code to read)

PDU Address	Register	Read	Write	Type	No. registers*
$0000	40001	Flow/s - low word	32 bits real	2	
$0001	40002	Flow/s - high word			
$0002	40003	Flow/m - low word	32 bits real	2	
$0003	40004	Flow/m- high word			
$0004	40005	Flow/h - low word	32 bits real	2	
$0005	40006	Flow/h - high word			
$0006	40007	Velocity – low word	32 bits real	2	
$0007	40008	Velocity – high word			

$0008	40009	Positive total – low word	32 bits real	2	
$0009	40010	Positive total – high word			
$000A	40011	Positive total – exponent	16 bits int.	1	
$000B	40012	Negative total – low word	32 bits real	2	
$000C	40013	Negative total – high word			
$000D	40014	Negative total – exponent	16 bits int.	1	
$000E	40015	Net total – low word	32 bits real	2	
$000F	40016	Net total – high word			
$0010	40017	Net total – exponent	16 bits int.	1	
$0011	40018	Energy flow – low word	32 bits real	2	
$0012	40019	Energy flow – high word			
$0013	40020	Energy total (hot) –low word	32 bits real	2	
$0014	40021	Energy total (hot) –high word			
$0015	40022	Energy total (hot) – exponent	16 bits int.	1	
$0016	40023	Energy total (cold) –low word	32 bits real	2	
$0017	40024	Energy total (cold) – exponent			
$0018	40025	Energy total (cold) – exponent	16 bits int.	1	
$0019	40026	Up signal int – low word	32 bits real	2	0 ~ 99.9
$001A	40027	Up signal int – high word			
$001B	40028	Down signal int – low word	32 bits real	2	0 ~ 99.9
$001C	40029	Down signal int – high word			
$001D	40030	Quality	16 bits int.	1	0 ~ 99

$001E	40031	Error code – char 1	String	1	Refer to "Error Diagnosis" for detailed codes meanings.
$003B	40060	Flow velocity unit –char 1,2	String	2	Only m/s right now
$003C	40061	Flow velocity unit –char 3,4			
$003D	40062	Flow rate unit –char 1,2	String	2	Note 1
$003E	40063	Flow rate unit –char 3,4			
$003F	40064	Flow total unit – char 1,2	String	1	
$0040	40065	Energy rate unit – char1,2	String	2	Note 2
$0041	40066	Energy rate unit – char 3,4			
$0042	40067	Energy total unit – char 1,2	String	1	
$0043	40068	Instrument address – low word	32 bits int.	2	
$0044	40069	Instrument address – high word			
$0045	40070	Serial number – char 1,2	String	4	
$0046	40071	Serial number – char 3,4			
$0047	40072	Serial number – char 5,6	String	4	
$0048	40073	Serial number – char 7,8			
$0049	40074	Analog Input AI1 Value – low word	32 bits real	2	Returned temperature value with RTD option
$004a	40075	Analog Input AI1 Value – high word			
$004b	40076	Analog Input AI2 Value – low word	32 bits real	2	
$004c	40077	Analog Input AI2 Value – high word			
$004d	40078	4 - 20 mA Value – low word	32 bits real	2	Unit: mA
$004e	40079	4 - 20 mA Value – high word			

b) Single Write Register Address List (use 0x06 performance code to write)

PDU Address	Register	Description	Read/Write	Type	No. registers*
$1003	44100	Flow meter address (1 - 255)	R/W	16 bits int.	1
$1004	44101	Communication Baud Rate 0 = 2400,1 = 4800, 2 = 9600, 3 = 19200, 4 = 38400,5 = 56000	R/W	16 bits int.	1

Notes:

1. The following flow rate units are available:
   0. "m^3" —Cubic Meter
   1. "l" —Liters
   2. "gal" —Gallons
   3. "Ig" —Imperial Gallons
   4. "mg" —Million Gallons
   5. "cf" —Cubic Feet
   6. "Ub" —US Barrels
   7. "Ib" —Imperial Barrels
   8. "Ob" —Oil Barrels
2. The following energy units are available：
   0. "BTU" —BTU
   1. "MBTU" —Thousand BTU
   2. "MMBT" —Million BTU
   3. "MWHr" —MWHr
   4. "KWHr" —KWHr
   5. "HPHr" —Horsepower Hr
   6. "Mcal" —Mcal
   7. "MJ" —MJ
3. 16 bits int—short integer, 32 bits int – long integer, 32 bits real—floating point number, String—alphabetic string

8. Appendix 2 – Flow Application Data

8.1 Sound Velocity and Viscosity for Fluids Commonly Used

Fluid	Sound Velocity (m/s)	Viscosity
Water 20°C	1482	1.0
Water 50°C	1543	0.55
Water 75°C	1554	0.39
Water 100°C	1543	0.29
Water 125°C	1511	0.25
Water 150°C	1466	0.21
Water 175°C	1401	0.18
Water 200°C	1333	0.15
Water 225°C	1249	0.14
Water 250°C	1156	0.12
Acetone	1190	
Carbinol	1121	
Ethanol	1168	
Alcohol	1440	1.5
Glycol	1620	
Glycerin	1923	1180
Gasoline	1250	0.80
Benzene	1330	
Toluene	1170	0.69
Kerosene	1420	2.3
Petroleum	1290	
Retinal	1280	
Aviation kerosene	1298	
Peanut oil	1472	
Castor oil	1502	

8.2 Sound Velocity for Various Materials Commonly Used

Pipe Material	Sound Velocity (m/s)
Steel	3206
ABS	2286
Aluminum	3048
Brass	2270
Cast Iron	2460
Fiberglass-Epoxy	3430
Glass	3276
Polyethylene	1950
PVC	2540

Liner Material	Sound Velocity (m/s)
Teflon	1225
Titanium	3150
Cement	4190
Bitumen	2540
Glass	5970
Plastic	2280
Polyethylene	1600
PTFE	1450
Rubber	1600

8.3 Sound Velocity in Water (1 atm) at Different Temperatures

T (°C)	V (m/s)	T (°C)	V (m/s)	T (°C)	V (m/s)
0	1402.3	34	1517.7	68	1554.3
1	1407.3	35	1519.7	69	1554.5
2	1412.2	36	1521.7	70	1554.7
3	1416.9	37	1523.5	71	1554.9
4	1421.6	38	1525.3	72	1555.0
5	1426.1	39	1527.1	73	1555.0
6	1430.5	40	1528.8	74	1555.1
7	1434.8	41	1530.4	75	1555.1
8	1439.1	42	1532.0	76	1555.0
9	1443.2	43	1533.5	77	1554.9
10	1447.2	44	1534.9	78	1554.8
11	1451.1	45	1536.3	79	1554.6
12	1454.9	46	1537.7	80	1554.4
13	1458.7	47	1538.9	81	1554.2
14	1462.3	48	1540.2	82	1553.9
15	1465.8	49	1541.3	83	1553.6
16	1469.3	50	1542.5	84	1553.2
17	1472.7	51	1543.5	85	1552.8
18	1476.0	52	1544.6	86	1552.4
19	1479.1	53	1545.5	87	1552.0
20	1482.3	54	1546.4	88	1551.5
21	1485.3	55	1547.3	89	1551.0
22	1488.2	56	1548.1	90	1550.4
23	1491.1	57	1548.9	91	1549.8
24	1493.9	58	1549.6	92	1549.2
25	1496.6	59	1550.3	93	1548.5
26	1499.2	60	1550.9	94	1547.5
27	1501.8	61	1551.5	95	1547.1
28	1504.3	62	1552.0	96	1546.3
29	1506.7	63	1552.5	97	1545.6
30	1509.0	64	1553.0	98	1544.7
31	1511.3	65	1553.4	99	1543.9
32	1513.5	66	1553.7		
33	1515.7	67	1554.0		

To refer to the sound velocity of other fluids and materials, please contact the factory.